BUILDING
COMMON GROUND

MAX FRANK®

Egcobox® M

ETA-19/0046 (EU)
Concrete quality
C25/30 & C20/25

Edition International

www.maxfrank.com

Contents

Egcobox M - C25/30 3

MM - C25/30 4
MM-CO - C25/30 11
MM-HVS /-WOS - C25/30 14
MM-BH /-WU /-BHS /-WUS - C25/30 22
MM± - C25/30 29
VM / VM-K - C25/30 33
VM± / VM-K± - C25/30 35
VM Z / VM Z-K - C25/30 37
VM - Moments from eccentric connection 40
AM 41
FM 43
OM 45
MM-Module - C25/30 47

Egcobox M - C20/25 49

MM - C20/25 50
MM-CO - C20/25 57
MM-HVS /-WOS - C20/25 60
MM-BH /-WU /-BHS /-WUS - C20/25 68
MM± - C20/25 75
VM / VM-K - C20/25 79
VM± / VM-K± - C20/25 81
VM Z / VM Z-K - C20/25 83
VM - Moments from eccentric connection 86
AM 87
FM 89
OM 91
MM-Module - C20/25 93

BUILDING
COMMON GROUND

MAX FRANK®

Egcobox® M

ETA-19/0046 (EU)

Concrete quality C25/30

Design table Egcobox® type MM - C25/30

for cantilever slabs for transmission of moment and shear force, insulation 80 mm

	Egcobox type			MM10-K	MM20	MM25	MM30	MM35	MM45	MM50	MM55	MM60	MM65	MM70	MM75	MM80	MM80-K	MM110-K	MM120-K	MM130-K	MM150-K
	length of element [mm]			500	1000	1000	1000	1000	1000	1000	1000	1000	1000	1000	1000	1000	500	500	500	500	500
	concrete cover [mm]			M_{Rd} [kNm/element]																	
	C30	C35	C50																		
height of connection [mm] good bonding conditions		**160**	175	-10,5	-16,5	-20,7	-22,4	-24,8	-28,0	-33,0	-37,2	-41,1	-44,3	-47,6	-50,7	-53,8	-26,7	-32,4	-36,5	-39,4	-48,3
	160	165	**180**	-11,1	-17,5	-21,9	-23,7	-26,3	-29,6	-35,0	-39,4	-43,5	-47,0	-50,4	-53,7	-57,0	-28,3	-34,4	-38,7	-41,8	-51,4
	165	170	185	-11,7	-18,5	-23,1	-25,1	-27,7	-31,3	-37,0	-41,6	-45,9	-49,6	-53,2	-56,7	-60,2	-29,9	-36,4	-41,0	-44,3	-54,5
	170	175	190	-12,4	-19,5	-24,3	-26,4	-29,2	-33,0	-38,9	-43,8	-48,4	-52,2	-56,1	-59,7	-63,4	-31,5	-38,4	-43,2	-46,7	-57,5
	175	**180**	195	-13,0	-20,5	-25,6	-27,7	-30,7	-34,6	-40,9	-46,0	-50,8	-54,9	-58,9	-62,7	-66,6	-33,1	-40,4	-45,5	-49,1	-60,6
	180	185	**200**	-13,6	-21,4	-26,8	-29,0	-32,2	-36,3	-42,9	-48,2	-53,3	-57,5	-61,7	-65,8	-69,8	-34,7	-42,4	-47,7	-51,5	-63,6
	185	190	205	-14,2	-22,4	-28,0	-30,4	-33,6	-38,0	-44,8	-50,5	-55,7	-60,1	-64,6	-68,8	-73,0	-36,3	-44,4	-50,0	-54,0	-66,7
	190	195	210	-14,8	-23,4	-29,3	-31,7	-35,1	-39,6	-46,8	-52,7	-58,2	-62,8	-67,4	-71,8	-76,2	-37,9	-46,4	-52,2	-56,4	-69,8
	195	**200**	215	-15,4	-24,4	-30,5	-33,0	-36,6	-41,3	-48,8	-54,9	-60,6	-65,4	-70,2	-74,8	-79,4	-39,5	-48,4	-54,5	-58,8	-72,8
	200	205	**220**	-16,0	-25,4	-31,7	-34,4	-38,1	-43,0	-50,7	-57,1	-63,1	-68,1	-73,1	-77,8	-82,6	-41,1	-50,4	-56,7	-61,3	-75,9
	205	210	225	-16,6	-26,4	-32,9	-35,7	-39,5	-44,6	-52,7	-59,3	-65,5	-70,7	-75,9	-80,8	-85,8	-42,7	-52,4	-59,0	-63,7	-78,9
	210	215	230	-17,3	-27,3	-34,2	-37,0	-41,0	-46,3	-54,7	-61,5	-67,9	-73,3	-78,7	-83,9	-89,0	-44,2	-54,4	-61,2	-66,1	-82,0
	215	**220**	235	-17,9	-28,3	-35,4	-38,4	-42,5	-48,0	-56,6	-63,7	-70,4	-76,0	-81,5	-86,9	-92,2	-45,8	-56,4	-63,5	-68,6	-85,1
	220	225	**240**	-18,5	-29,3	-36,6	-39,7	-44,0	-49,6	-58,6	-65,9	-72,8	-78,6	-84,4	-89,9	-95,4	-47,4	-58,4	-65,7	-71,0	-88,1
	225	230	245	-19,1	-30,3	-37,9	-41,0	-45,4	-51,3	-60,6	-68,2	-75,3	-81,2	-87,2	-92,9	-98,6	-49,0	-60,4	-68,0	-73,4	-91,2
	230	235	250	-19,7	-31,3	-39,1	-42,4	-46,9	-53,0	-62,5	-70,4	-77,7	-83,9	-90,0	-95,9	-101,8	-50,6	-62,4	-70,2	-75,9	-94,2
	235	**240**	255	-20,3	-32,3	-40,3	-43,7	-48,4	-54,6	-64,5	-72,6	-80,2	-86,5	-92,9	-98,9	-105,0	-52,2	-64,4	-72,5	-78,3	-97,3
	240	245	**260**	-20,9	-33,2	-41,6	-45,0	-49,9	-56,3	-66,5	-74,8	-82,6	-89,2	-95,7	-101,9	-108,2	-53,8	-66,4	-74,7	-80,7	-100,4
	245	250	265	-21,5	-34,2	-42,8	-46,4	-51,3	-58,0	-68,4	-77,0	-85,1	-91,8	-98,5	-105,0	-111,4	-55,4	-68,4	-77,0	-83,2	-103,4
	250	255	270	-22,2	-35,2	-44,0	-47,7	-52,8	-59,6	-70,4	-79,2	-87,5	-94,4	-101,4	-108,0	-114,7	-57,0	-70,4	-79,2	-85,6	-106,5
	255	**260**	275	-22,8	-36,2	-45,2	-49,0	-54,3	-61,3	-72,4	-81,4	-89,9	-97,1	-104,2	-111,0	-117,9	-58,6	-72,4	-81,5	-88,0	-109,5
	260	265	**280**	-23,4	-37,2	-46,5	-50,4	-55,8	-63,0	-74,3	-83,6	-92,4	-99,7	-107,0	-114,0	-121,1	-60,2	-74,4	-83,7	-90,4	-112,6
	265	270	285	-24,0	-38,2	-47,7	-51,7	-57,2	-64,6	-76,3	-85,9	-94,8	-102,3	-109,9	-117,0	-124,3	-61,8	-76,4	-86,0	-92,9	-115,7
	270	275	290	-24,6	-39,1	-48,9	-53,0	-58,7	-66,3	-78,3	-88,1	-97,3	-105,0	-112,7	-120,0	-127,5	-63,3	-78,4	-88,2	-95,3	-118,7
	275	**280**	295	-25,2	-40,1	-50,2	-54,4	-60,2	-68,0	-80,2	-90,3	-99,7	-107,6	-115,5	-123,1	-130,7	-64,9	-80,3	-90,5	-97,7	-121,8
	280	285	**300**	-25,8	-41,1	-51,4	-55,7	-61,7	-69,6	-82,2	-92,5	-102,2	-110,3	-118,4	-126,1	-133,9	-66,5	-82,3	-92,7	-100,2	-124,8
	285	290		-26,4	-42,1	-52,6	-57,0	-63,1	-71,3	-84,2	-94,7	-104,6	-112,9	-121,2	-129,1	-137,1	-68,1	-84,3	-95,0	-102,6	-127,9
	290	295		-27,0	-43,1	-53,8	-58,4	-64,6	-73,0	-86,1	-96,9	-107,1	-115,5	-124,0	-132,1	-140,3	-69,7	-86,3	-97,2	-105,0	-131,0
	295	**300**		-27,7	-44,1	-55,1	-59,7	-66,1	-74,6	-88,1	-99,1	-109,5	-118,2	-126,8	-135,1	-143,5	-71,3	-88,3	-99,5	-107,5	-134,0
	300			-28,3	-45,0	-56,3	-61,0	-67,6	-76,3	-90,1	-101,3	-111,9	-120,8	-129,7	-138,1	-146,7	-72,9	-90,3	-101,7	-109,9	-137,1

Shear force level		concrete cover [mm]			V_{Rd} [kN/element]																		
		C30	C35	C50																			
height of connection [mm] good bonding conditions	VS	160-190	160-195	175-210	24,3	48,7	48,7	48,7	48,7	48,7	48,7	48,7	48,7	48,7	48,7	48,7	48,7	48,7	48,7	48,7	48,7	48,7	48,7
		195-300	200-300	215-300	24,3	48,7	48,7	48,7	48,7	48,7	48,7	48,7	48,7	48,7	48,7	48,7	48,7	48,7	48,7	48,7	48,7	48,7	48,7
	V1	160-190	160-195	175-210	43,3	86,5	86,5	86,5	86,5	86,5	86,5	86,5	86,5	86,5	86,5	86,5	86,5	86,5	86,5	86,5	86,5	86,5	86,5
		195-300	200-300	215-300	43,3	86,5	86,5	86,5	86,5	86,5	86,5	86,5	86,5	86,5	86,5	86,5	86,5	86,5	86,5	86,5	86,5	86,5	86,5
	V2	160-170	160-175	175-190	64,9	129,8	129,8	129,8	129,8	129,8	129,8	129,8	129,8	129,8	129,8	129,8	129,8	129,8	-	129,8	129,8	129,8	129,8
		175-190	180-195	195-210	64,9	129,8	129,8	129,8	129,8	129,8	129,8	129,8	129,8	129,8	129,8	129,8	129,8	129,8	135,2	129,8	129,8	129,8	129,8
		195-300	200-300	215-300	64,9	129,8	129,8	129,8	129,8	129,8	129,8	129,8	129,8	129,8	129,8	129,8	129,8	129,8	135,2	129,8	129,8	129,8	129,8
	V3	160-190	160-195	175-210	86,5	173,1	173,1	173,1	173,1	173,1	173,1	173,1	173,1	173,1	173,1	173,1	173,1	173,1	-	-	-	-	-
		195-300	200-300	215-300	86,5	173,1	173,1	173,1	173,1	173,1	173,1	173,1	173,1	173,1	173,1	173,1	173,1	173,1	-	-	-	-	-
	V4	175-190	180-195	195-210	-	266,5	266,5	266,5	270,4	270,4	270,4	270,4	270,4	270,4	270,4	270,4	270,4	270,4	169,0	169,0	169,0	169,0	169,0
		195-300	200-300	215-300	-	266,5	266,5	266,5	270,4	270,4	270,4	270,4	270,4	270,4	270,4	270,4	270,4	270,4	169,0	169,0	169,0	169,0	169,0
	V6±	160-190	160-195	175-210	+24,3/ -24,3	+48,7/ -48,7	+48,7/ -48,7	+48,7/ -48,7	+48,7/ -48,7	+48,7/ -48,7	+48,7/ -48,7	+48,7/ -48,7	+48,7/ -48,7	+48,7/ -48,7	+48,7/ -48,7	+48,7/ -48,7	+48,7/ -48,7	+48,7/ -48,7	+48,7/ -48,7	+48,7/ -48,7	+48,7/ -48,7	+48,7/ -48,7	+48,7/ -48,7
		195-300	200-300	215-300	+24,3/ -24,3	+48,7/ -48,7	+48,7/ -48,7	+48,7/ -48,7	+48,7/ -48,7	+48,7/ -48,7	+48,7/ -48,7	+48,7/ -48,7	+48,7/ -48,7	+48,7/ -48,7	+48,7/ -48,7	+48,7/ -48,7	+48,7/ -48,7	+48,7/ -48,7	+48,7/ -48,7	+48,7/ -48,7	+48,7/ -48,7	+48,7/ -48,7	+48,7/ -48,7
	V7±	160-190	160-195	175-210	+48,7/ -36,5	+97,4/ -73	+97,4/ -73	+97,4/ -73	+97,4/ -73	+97,4/ -73	+97,4/ -73	+129,8/ -86,5	+129,8/ -86,5	+129,8/ -86,5	+129,8/ -86,5	+129,8/ -86,5	+129,8/ -86,5	+129,8/ -86,5	+129,8/ -86,5	+129,8/ -86,5	+129,8/ -86,5	+129,8/ -86,5	+129,8/ -86,5
		195-300	200-300	215-300	+48,7/ -36,5	+97,4/ -73	+97,4/ -73	+97,4/ -73	+97,4/ -73	+97,4/ -73	+97,4/ -73	+129,8/ -86,5	+129,8/ -86,5	+129,8/ -86,5	+129,8/ -86,5	+129,8/ -86,5	+129,8/ -86,5	+129,8/ -86,5	+129,8/ -86,5	+129,8/ -86,5	+129,8/ -86,5	+129,8/ -86,5	+129,8/ -86,5
	V8±	175-190	180-195	195-210	+101,4/ -101,4	+202,8/ -202,8	+202,8/ -202,8	+202,8/ -202,8	+202,8/ -202,8	+202,8/ -202,8	+202,8/ -202,8	+202,8/ -202,8	+202,8/ -202,8	+202,8/ -202,8	+202,8/ -202,8	+202,8/ -202,8	+202,8/ -202,8	+202,8/ -202,8	+101,4/ -101,4	+169,0/ -169,0	+169,0/ -169,0	+169,0/ -169,0	+169,0/ -169,0
		195-300	200-300	215-300	+101,4/ -101,4	+202,8/ -202,8	+202,8/ -202,8	+202,8/ -202,8	+202,8/ -202,8	+202,8/ -202,8	+202,8/ -202,8	+202,8/ -202,8	+202,8/ -202,8	+202,8/ -202,8	+202,8/ -202,8	+202,8/ -202,8	+202,8/ -202,8	+202,8/ -202,8	+101,4/ -101,4	+169,0/ -169,0	+169,0/ -169,0	+169,0/ -169,0	+169,0/ -169,0

Shear force level VS to V4 also possible with lifting shear force (-24.3 kN/element depending on height of connection/concrete cover) (designation: VS±, V1±, V2±, V3± or V4±)

Reinforcement Egcobox® type MM

Egcobox type	MM10-K	MM20	MM25	MM30	MM35	MM45	MM50	MM55	MM60	MM65	MM70	MM75	MM80	MM80-K	MM110-K	MM120-K	MM130-K	MM150-K
length of element [mm]	**500**	**1000**	**1000**	**1000**	**1000**	**1000**	**1000**	**1000**	**1000**	**1000**	**1000**	**1000**	**1000**	**500**	**500**	**500**	**500**	**500**
tensile bars	4 ø 8	4 ø 12	5 ø 12	6 ø 12	6 ø 12	7 ø 12	8 ø 12	9 ø 12	10 ø 12	11 ø 12	12 ø 12	13 ø 12	14 ø 12	7 ø 12	6 ø 14	7 ø 14	8 ø 14	7 ø 16
length of tensile bars [mm]	1090	1300	1300	1300	1300	1300	1300	1300	1300	1300	1300	1300	1300	1300	1580	1580	1580	2520
compression bearings	2 ø 12	4 ø 12	4 ø 12	4 ø 12	5 ø 12	5 ø 12	6 ø 12	7 ø 12	8 ø 12	9 ø 12	10 ø 12	11 ø 12	12 ø 12	6 ø 12	-	-	-	-
compression bars	-	-	-	-	-	-	-	-	-	-	-	-	-	-	6 ø 14	7 ø 14	8 ø 14	7 ø 16
length of compression bars [mm]															1580	1580	1580	2520
shear force bars VS	2 ø 6	4 ø 6	4 ø 6	4 ø 6	4 ø 6	4 ø 6	4 ø 6	4 ø 6	4 ø 6	4 ø 6	4 ø 6	4 ø 6	4 ø 6	4 ø 6	4 ø 6	4 ø 6	4 ø 6	4 ø 6
shear force bars V1	2 ø 8	4 ø 8	4 ø 8	4 ø 8	4 ø 8	4 ø 8	4 ø 8	4 ø 8	4 ø 8	4 ø 8	4 ø 8	4 ø 8	4 ø 8	4 ø 8	4 ø 8	4 ø 8	4 ø 8	4 ø 8
shear force bars V2	3 ø 8	6 ø 8	6 ø 8	6 ø 8	6 ø 8	6 ø 8	6 ø 8	6 ø 8	6 ø 8	6 ø 8	6 ø 8	6 ø 8	6 ø 8	4 ø 10	6 ø 8	6 ø 8	6 ø 8	6 ø 8
shear force bars V3	4 ø 8	8 ø 8	8 ø 8	8 ø 8	8 ø 8	8 ø 8	8 ø 8	8 ø 8	8 ø 8	8 ø 8	8 ø 8	8 ø 8	8 ø 8	-	-	-	-	-
shear force bars V4	-	8 ø 10	8 ø 10	8 ø 10	8 ø 10	8 ø 10	8 ø 10	8 ø 10	8 ø 10	8 ø 10	8 ø 10	8 ø 10	8 ø 10	5 ø 10	5 ø 10	5 ø 10	5 ø 10	5 ø 10
shear force bars VS±	-	4 ø6 / 2 ø6	4 ø6 / 2 ø6	4 ø6 / 2 ø6	4 ø6 / 2 ø6	4 ø6 / 2 ø6	4 ø6 / 2 ø6	4 ø6 / 2 ø6	4 ø6 / 2 ø6	4 ø6 / 2 ø6	4 ø6 / 2 ø6	4 ø6 / 2 ø6	4 ø6 / 2 ø6	4 ø6 / 2 ø6	4 ø6 / 2 ø6	4 ø6 / 2 ø6	4 ø6 / 2 ø6	4 ø6 / 2 ø6
shear force bars V1±	-	4 ø8 / 2 ø6	4 ø8 / 2 ø6	4 ø8 / 2 ø6	4 ø8 / 2 ø6	4 ø8 / 2 ø6	4 ø8 / 2 ø6	4 ø8 / 2 ø6	4 ø8 / 2 ø6	4 ø8 / 2 ø6	4 ø8 / 2 ø6	4 ø8 / 2 ø6	4 ø8 / 2 ø6	4 ø8 / 2 ø6	4 ø8 / 2 ø6	4 ø8 / 2 ø6	4 ø8 / 2 ø6	4 ø8 / 2 ø6
shear force bars V2±	-	6 ø8 / 2 ø6	6 ø8 / 2 ø6	6 ø8 / 2 ø6	6 ø8 / 2 ø6	6 ø8 / 2 ø6	6 ø8 / 2 ø6	6 ø8 / 2 ø6	6 ø8 / 2 ø6	6 ø8 / 2 ø6	6 ø8 / 2 ø6	6 ø8 / 2 ø6	6 ø8 / 2 ø6	4 ø10 / 2 ø6	6 ø8 / 2 ø6	6 ø8 / 2 ø6	6 ø8 / 2 ø6	6 ø8 / 2 ø6
shear force bars V3±	-	8 ø8 / 2 ø6	8 ø8 / 2 ø6	8 ø8 / 2 ø6	8 ø8 / 2 ø6	8 ø8 / 2 ø6	8 ø8 / 2 ø6	8 ø8 / 2 ø6	8 ø8 / 2 ø6	8 ø8 / 2 ø6	8 ø8 / 2 ø6	8 ø8 / 2 ø6	8 ø8 / 2 ø6	-	-	-	-	-
shear force bars V4±	-	8 ø10 / 2 ø6	8 ø10 / 2 ø6	8 ø10 / 2 ø6	8 ø10 / 2 ø6	8 ø10 / 2 ø6	8 ø10 / 2 ø6	8 ø10 / 2 ø6	8 ø10 / 2 ø6	8 ø10 / 2 ø6	8 ø10 / 2 ø6	8 ø10 / 2 ø6	8 ø10 / 2 ø6	5 ø 10 / 2 ø 6	5 ø 10 / 2 ø 6	5 ø 10 / 2 ø 6	5 ø 10 / 2 ø 6	5 ø 10 / 2 ø 6
shear force bars V6±	2 ø6 / 2 ø6	4 ø6 / 4 ø6	4 ø6 / 4 ø6	4 ø6 / 4 ø6	4 ø6 / 4 ø6	4 ø6 / 4 ø6	4 ø6 / 4 ø6	4 ø6 / 4 ø6	4 ø6 / 4 ø6	4 ø6 / 4 ø6	4 ø6 / 4 ø6	4 ø6 / 4 ø6	4 ø6 / 4 ø6	2 ø6 / 2 ø6	4 ø6 / 4 ø6	4 ø6 / 4 ø6	4 ø6 / 4 ø6	4 ø6 / 4 ø6
shear force bars V7±	4 ø6 / 3 ø6	8 ø6 / 6 ø6	8 ø6 / 6 ø6	8 ø6 / 6 ø6	8 ø6 / 6 ø6	8 ø6 / 6 ø6	8 ø6 / 6 ø6	6 ø8 / 4 ø8	6 ø8 / 4 ø8	6 ø8 / 4 ø8	6 ø8 / 4 ø8	6 ø8 / 4 ø8	6 ø8 / 4 ø8	3 ø8 / 2 ø8	6 ø8 / 4 ø8	6 ø8 / 4 ø8	6 ø8 / 4 ø8	6 ø8 / 4 ø8
shear force bars V8±	3 ø10 / 3 ø10	6 ø10 / 6 ø10	6 ø10 / 6 ø10	6 ø10 / 6 ø10	6 ø10 / 6 ø10	6 ø10 / 6 ø10	6 ø10 / 6 ø10	6 ø10 / 6 ø10	6 ø10 / 6 ø10	6 ø10 / 6 ø10	6 ø10 / 6 ø10	6 ø10 / 6 ø10	6 ø10 / 6 ø10	3 ø10 / 3 ø10	5 ø10 / 5 ø10	5 ø10 / 5 ø10	5 ø10 / 5 ø10	5 ø10 / 5 ø10
applicable expansion joint distances [m]	**11,7**	**11,7**	**11,7**	**11,7**	**11,7**	**11,7**	**11,7**	**11,7**	**11,7**	**11,7**	**11,7**	**11,7**	**11,7**	**11,7**	**11,7**	**11,7**	**11,7**	**10,1**

The Egcobox® is also available as semi-prefab version in variant "FO" (from height 185 mm) or "F" (from height 160 mm): e.g. MM50-FO-V1-C35-h200

Torsion of the slab in the area of the insulation joint - Egcobox® type MM

	Egcobox type			MM10-K	MM20	MM25	MM30	MM35	MM45	MM50	MM55	MM60	MM65	MM70	MM75	MM80	MM80-K	MM110-K	MM120-K	MM130-K	MM150-K
	length of element [mm]			**500**	**1000**	**1000**	**1000**	**1000**	**1000**	**1000**	**1000**	**1000**	**1000**	**1000**	**1000**	**1000**	**500**	**500**	**500**	**500**	**500**
	concrete cover [mm]			**banking factor k [1/kNm]**																	
	C30	**C35**	**C50**																		
height of connection [mm] good bonding conditions		**160**	175	1,308	0,946	0,788	0,683	0,652	0,576	0,499	0,440	0,394	0,357	0,326	0,300	0,278	0,556	0,786	0,674	0,590	0,520
	160	165	**180**	1,168	0,843	0,702	0,608	0,580	0,513	0,445	0,392	0,351	0,318	0,290	0,267	0,247	0,495	0,697	0,598	0,523	0,460
	165	170	185	1,049	0,756	0,629	0,545	0,520	0,460	0,399	0,352	0,315	0,285	0,260	0,239	0,222	0,444	0,623	0,534	0,467	0,410
	170	175	190	0,948	0,681	0,567	0,492	0,469	0,415	0,359	0,317	0,284	0,257	0,235	0,216	0,200	0,400	0,560	0,480	0,420	0,368
	175	**180**	195	0,861	0,617	0,514	0,446	0,425	0,376	0,326	0,287	0,257	0,233	0,213	0,196	0,181	0,362	0,506	0,433	0,379	0,331
	180	185	**200**	0,785	0,562	0,468	0,406	0,387	0,342	0,296	0,262	0,234	0,212	0,193	0,178	0,165	0,330	0,459	0,393	0,344	0,300
	185	190	205	0,719	0,514	0,428	0,371	0,354	0,313	0,271	0,239	0,214	0,194	0,177	0,163	0,151	0,302	0,419	0,359	0,314	0,273
	190	195	210	0,661	0,471	0,393	0,340	0,325	0,287	0,249	0,219	0,196	0,178	0,162	0,149	0,138	0,277	0,383	0,329	0,287	0,250
	195	**200**	215	0,609	0,434	0,362	0,313	0,299	0,265	0,229	0,202	0,181	0,164	0,150	0,138	0,127	0,255	0,352	0,302	0,264	0,229
	200	205	**220**	0,564	0,401	0,334	0,290	0,276	0,244	0,212	0,187	0,167	0,151	0,138	0,127	0,118	0,236	0,325	0,278	0,244	0,211
	205	210	225	0,523	0,372	0,310	0,268	0,256	0,227	0,196	0,173	0,155	0,140	0,128	0,118	0,109	0,218	0,301	0,258	0,225	0,195
	210	215	230	0,486	0,346	0,288	0,249	0,238	0,211	0,182	0,161	0,144	0,130	0,119	0,110	0,101	0,203	0,279	0,239	0,209	0,181
	215	**220**	235	0,454	0,322	0,268	0,232	0,222	0,196	0,170	0,150	0,134	0,121	0,111	0,102	0,095	0,189	0,259	0,222	0,195	0,168
	220	225	**240**	0,424	0,301	0,251	0,217	0,207	0,183	0,159	0,140	0,125	0,113	0,104	0,095	0,088	0,177	0,242	0,207	0,181	0,157
	225	230	245	0,397	0,281	0,235	0,203	0,194	0,171	0,149	0,131	0,117	0,106	0,097	0,089	0,083	0,165	0,226	0,194	0,170	0,146
	230	235	250	0,373	0,264	0,220	0,191	0,182	0,161	0,139	0,123	0,110	0,100	0,091	0,084	0,078	0,155	0,212	0,182	0,159	0,137
	235	**240**	255	0,351	0,248	0,207	0,179	0,171	0,151	0,131	0,116	0,103	0,094	0,085	0,079	0,073	0,146	0,199	0,171	0,149	0,128
	240	245	**260**	0,331	0,234	0,195	0,169	0,161	0,142	0,123	0,109	0,097	0,088	0,080	0,074	0,069	0,137	0,187	0,160	0,140	0,121
	245	250	265	0,312	0,220	0,184	0,159	0,152	0,134	0,116	0,103	0,092	0,083	0,076	0,070	0,065	0,129	0,176	0,151	0,132	0,114
	250	255	270	0,295	0,208	0,174	0,150	0,143	0,127	0,110	0,097	0,087	0,079	0,072	0,066	0,061	0,122	0,167	0,143	0,125	0,107
	255	**260**	275	0,280	0,197	0,164	0,142	0,136	0,120	0,104	0,092	0,082	0,074	0,068	0,062	0,058	0,116	0,157	0,135	0,118	0,101
	260	265	**280**	0,265	0,187	0,156	0,135	0,129	0,114	0,099	0,087	0,078	0,070	0,064	0,059	0,055	0,110	0,149	0,128	0,112	0,096
	265	270	285	0,252	0,177	0,148	0,128	0,122	0,108	0,094	0,083	0,074	0,067	0,061	0,056	0,052	0,104	0,141	0,121	0,106	0,091
	270	275	290	0,239	0,169	0,140	0,122	0,116	0,103	0,089	0,078	0,070	0,064	0,058	0,053	0,049	0,099	0,134	0,115	0,101	0,086
	275	**280**	295	0,228	0,160	0,134	0,116	0,110	0,098	0,085	0,075	0,067	0,060	0,055	0,051	0,047	0,094	0,128	0,109	0,096	0,082
	280	285	**300**	0,217	0,153	0,127	0,110	0,105	0,093	0,081	0,071	0,064	0,058	0,053	0,048	0,045	0,090	0,122	0,104	0,091	0,078
	285	290		0,207	0,146	0,121	0,105	0,100	0,089	0,077	0,068	0,061	0,055	0,050	0,046	0,043	0,086	0,116	0,099	0,087	0,074
	290	295		0,198	0,139	0,116	0,100	0,096	0,085	0,073	0,065	0,058	0,052	0,048	0,044	0,041	0,082	0,111	0,095	0,083	0,071
	295	**300**		0,189	0,133	0,111	0,096	0,092	0,081	0,070	0,062	0,055	0,050	0,046	0,042	0,039	0,078	0,106	0,091	0,079	0,068
	300			0,181	0,127	0,106	0,092	0,088	0,078	0,067	0,059	0,053	0,048	0,044	0,040	0,037	0,075	0,101	0,087	0,076	0,065

Rotation spring stiffness Egcobox® type MM

	Egcobox type			MM10-K	MM20	MM25	MM30	MM35	MM45	MM50	MM55	MM60	MM65	MM70	MM75	MM80	MM80-K	MM110-K	MM120-K	MM130-K	MM150-K
	length of element [mm]			500	1000	1000	1000	1000	1000	1000	1000	1000	1000	1000	1000	1000	500	500	500	500	500
	concrete cover [mm]			Rotation spring stiffness [kNm/rad/Element]																	
	C30	C35	C50																		
height of connection [mm] good bonding conditions		**160**	175	765	1057	1269	1464	1535	1735	2003	2271	2537	2804	3069	3335	3600	1800	1272	1484	1696	1921
	160	165	**180**	856	1187	1424	1644	1723	1947	2249	2549	2848	3147	3446	3744	4041	2021	1434	1673	1912	2172
	165	170	185	953	1324	1589	1834	1922	2172	2509	2844	3178	3511	3844	4176	4508	2254	1606	1873	2141	2439
	170	175	190	1055	1468	1762	2034	2132	2410	2783	3154	3525	3894	4263	4632	5001	2500	1787	2085	2382	2720
	175	**180**	195	1162	1620	1945	2245	2352	2659	3071	3481	3890	4297	4705	5112	5518	2759	1978	2307	2637	3017
	180	185	**200**	1274	1780	2136	2466	2584	2921	3373	3824	4273	4721	5168	5615	6062	3031	2178	2542	2905	3330
	185	190	205	1391	1947	2337	2697	2827	3195	3690	4182	4673	5164	5653	6142	6631	3315	2389	2787	3185	3658
	190	195	210	1514	2121	2546	2939	3080	3482	4021	4557	5092	5627	6160	6693	7225	3613	2609	3044	3478	4001
	195	**200**	215	1642	2303	2765	3191	3344	3780	4366	4948	5529	6109	6688	7267	7845	3923	2839	3312	3785	4360
	200	205	**220**	1775	2493	2992	3453	3619	4091	4725	5355	5984	6612	7239	7865	8490	4245	3078	3591	4104	4734
	205	210	225	1913	2690	3229	3726	3905	4415	5098	5779	6457	7134	7811	8486	9161	4581	3327	3882	4436	5123
	210	215	230	2056	2894	3474	4009	4202	4750	5486	6218	6948	7677	8404	9131	9858	4929	3586	4184	4781	5528
	215	**220**	235	2204	3106	3728	4303	4510	5098	5887	6673	7457	8239	9020	9800	10580	5290	3855	4497	5139	5948
	220	225	**240**	2358	3326	3992	4607	4829	5458	6303	7145	7984	8821	9657	10493	11327	5664	4133	4822	5510	6384
	225	230	245	2516	3553	4264	4921	5158	5831	6734	7632	8529	9423	10316	11209	12100	6050	4421	5157	5894	6835
	230	235	250	2680	3787	4546	5246	5498	6216	7178	8136	9091	10045	10997	11948	12899	6449	4718	5505	6291	7302
	235	**240**	255	2849	4029	4836	5581	5850	6613	7636	8656	9672	10686	11699	12711	13723	6861	5026	5863	6701	7783
	240	245	**260**	3024	4278	5135	5927	6212	7022	8109	9192	10271	11348	12424	13498	14572	7286	5343	6233	7123	8281
	245	250	265	3203	4535	5444	6283	6585	7444	8596	9743	10888	12029	13170	14309	15447	7724	5669	6614	7559	8793
	250	255	270	3388	4800	5761	6649	6969	7878	9097	10311	11522	12731	13938	15143	16348	8174	6006	7007	8008	9321
	255	**260**	275	3577	5072	6087	7026	7364	8324	9613	10896	12175	13452	14727	16001	17274	8637	6352	7410	8469	9865
	260	265	**280**	3772	5351	6423	7413	7769	8782	10142	11496	12846	14193	15538	16882	18225	9113	6708	7825	8943	10423
	265	270	285	3972	5638	6767	7810	8186	9253	10686	12112	13534	14954	16371	17787	19202	9601	7073	8252	9431	10998
	270	275	290	4178	5932	7120	8218	8613	9736	11244	12744	14241	15734	17226	18716	20205	10102	7448	8689	9931	11587
	275	**280**	295	4388	6234	7483	8636	9051	10232	11816	13393	14966	16535	18103	19668	21233	10617	7833	9138	10444	12192
	280	285	**300**	4604	6543	7854	9065	9500	10740	12402	14057	15708	17356	19001	20644	22287	11143	8228	9599	10970	12813
	285	290		4824	6860	8234	9503	9960	11260	13003	14738	16469	18196	19921	21644	23366	11683	8632	10070	11509	13448
	290	295		5050	7184	8624	9953	10431	11792	13617	15435	17247	19056	20863	22667	24470	12235	9046	10553	12061	14099
	295	**300**		5281	7516	9022	10412	10913	12336	14246	16148	18044	19936	21826	23714	25600	12800	9469	11048	12626	14766
	300			5518	7856	9429	10882	11406	12893	14889	16877	18858	20836	22811	24784	26756	13378	9903	11553	13204	15448

On-site reinforcement Egcobox® type MM - C25/30

Egcobox type	MM10-K	MM20	MM25	MM30	MM35	MM45	MM50	MM55	MM60	MM65	MM70	MM75	MM80	MM80-K	MM110-K	MM120-K	MM130-K	MM150-K
length of element [mm]	**500**	**1000**	**1000**	**1000**	**1000**	**1000**	**1000**	**1000**	**1000**	**1000**	**1000**	**1000**	**1000**	**500**	**500**	**500**	**500**	**500**
Egcobox ø rebar [mm]	ø 8	ø 12	ø 12	ø 12	ø 12	ø 12	ø 12	ø 12	ø 12	ø 12	ø 12	ø 12	ø 12	ø 12	ø 14	ø 14	ø 14	ø 16
Egcobox l_0 rebar [mm]	475	580	580	580	580	580	580	580	580	580	580	580	580	580	720	720	720	1190
item ① - lapping reinforcement / element																		
≥ a_s [cm²] B500	2,81	4,52	5,65	6,13	6,79	7,66	9,05	10,18	11,24	12,13	13,02	13,87	14,73	7,32	9,19	10,35	11,18	14,07
suggested on-site reinforcement [mm]	ø 10	ø 12	ø 12	ø 12	ø 12	ø 12	ø 12	ø 12	ø 12	ø 12	ø 12	ø 12	ø 12	ø 12	ø 14	ø 14	ø 14	ø 16
item ② - suspension reinforcement shear force / element																		
shear force level VS ≥ a_s [cm²] B500	0,56	1,12	1,12	1,12	1,12	1,12	1,12	1,12	1,12	1,12	1,12	1,12	1,12	1,12	1,12	1,12	1,12	1,12
shear force level V1 ≥ a_s [cm²] B500	1,00	1,99	1,99	1,99	1,99	1,99	1,99	1,99	1,99	1,99	1,99	1,99	1,99	1,99	1,99	1,99	1,99	1,99
shear force level V2 ≥ a_s [cm²] B500	1,49	2,99	2,99	2,99	2,99	2,99	2,99	2,99	2,99	2,99	2,99	2,99	2,99	3,11	2,99	2,99	2,99	2,99
shear force level V3 ≥ a_s [cm²] B500	1,99	3,98	3,98	3,98	3,98	3,98	3,98	3,98	3,98	3,98	3,98	3,98	3,98	-	-	-	-	-
shear force level V4 ≥ a_s [cm²] B500	-	6,13	6,13	6,13	6,22	6,22	6,22	6,22	6,22	6,22	6,22	6,22	6,22	3,89	3,89	3,89	3,89	3,89
shear force level VS± ≥ a_s [cm²] B500	-	1,12	1,12	1,12	1,12	1,12	1,12	1,12	1,12	1,12	1,12	1,12	1,12	1,12	1,12	1,12	1,12	1,12
shear force level V1± ≥ a_s [cm²] B500	-	1,99	1,99	1,99	1,99	1,99	1,99	1,99	1,99	1,99	1,99	1,99	1,99	1,99	1,99	1,99	1,99	1,99
shear force level V2± ≥ a_s [cm²] B500	-	2,99	2,99	2,99	2,99	2,99	2,99	2,99	2,99	2,99	2,99	2,99	2,99	3,11	2,99	2,99	2,99	2,99
shear force level V3± ≥ a_s [cm²] B500	-	3,98	3,98	3,98	3,98	3,98	3,98	3,98	3,98	3,98	3,98	3,98	3,98	-	-	-	-	-
shear force level V4± ≥ a_s [cm²] B500	-	6,13	6,13	6,13	6,22	6,22	6,22	6,22	6,22	6,22	6,22	6,22	6,22	3,89	3,89	3,89	3,89	3,89
shear force level V6± ≥ a_s [cm²] B500	0,56	1,12	1,12	1,12	1,12	1,12	1,12	1,12	1,12	1,12	1,12	1,12	1,12	1,12	1,12	1,12	1,12	1,12
shear force level V7± ≥ a_s [cm²] B500	1,12	2,24	2,24	2,24	2,24	2,24	2,24	2,99	2,99	2,99	2,99	2,99	2,99	1,49	2,99	2,99	2,99	2,99
shear force level V8± ≥ a_s [cm²] B500	2,33	4,66	4,66	4,66	4,66	4,66	4,66	4,66	4,66	4,66	4,66	4,66	4,66	2,33	3,89	3,89	3,89	3,89

item ③+④ - structural reinforcement
In the slab edge of the u-bar reinforcement is respectively to arrange ≥ ø8 (item ③).
On the balcony side, it is recommended to design the edge reinforcement for the shear force V_{Ed} / f_{yd} ≥ ø6/250 mm according to EN 1992 (item ④ - vs. item ②).

The suggested lapping reinforcement (α_6=1,5) is selected (item ①) to transfer 100% of the M_{Rd} of the Egcobox® (height Egcobox® = height floor). An other reinforcement selection is possible.
In case of an other reinforcement selection shall be approved the lapping reinforcement in accordance with EN 1992. The reinforcement cross section or the lapping length can be derated in reference of utilization proportional M_{Ed} / M_{Rd}.
The lapping reinforcement must be approved by the structural engineer.

The proposed steel cross-section a_s (item ②) covers the maximum design transverse force V_{Rd} of the Egcobox®. In case of smaller actions, the edge reinforcement may be determined with V_{Ed} / f_{yd} ≥ ø6/250 mm.

The specifications apply to good bonding conditions.

design proposal

direct support

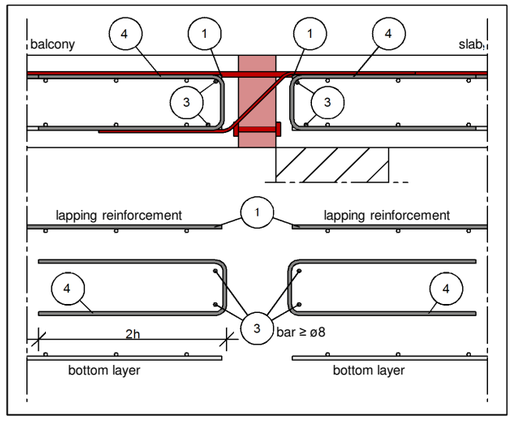

direct support (semi-prefab slab)

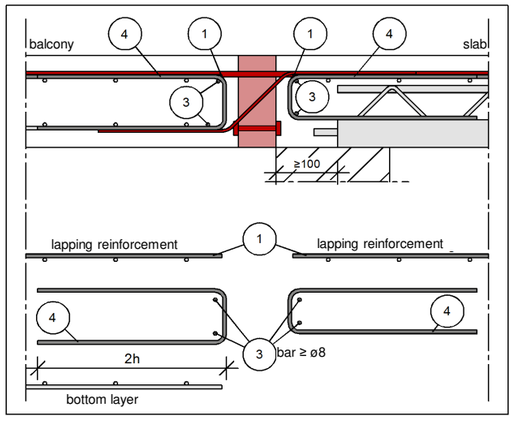

direct support with alternating shear force (V6±, V7±, V8±)

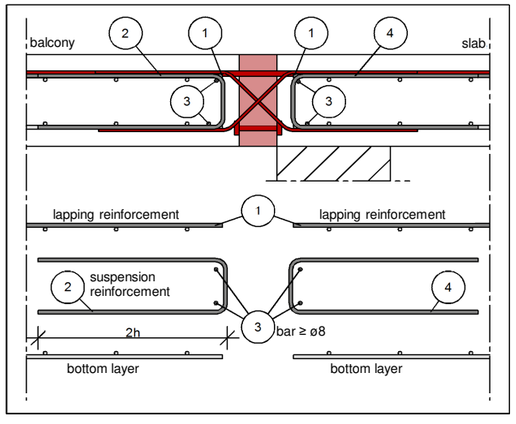

For the Egcobox shear force levels VS± to V4±, a constructive edging on the balcony side is generally sufficient.

design proposal

indirect support

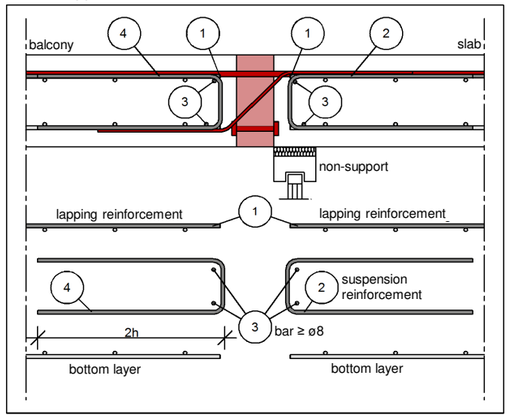

indirect support (semi-prefab slab)

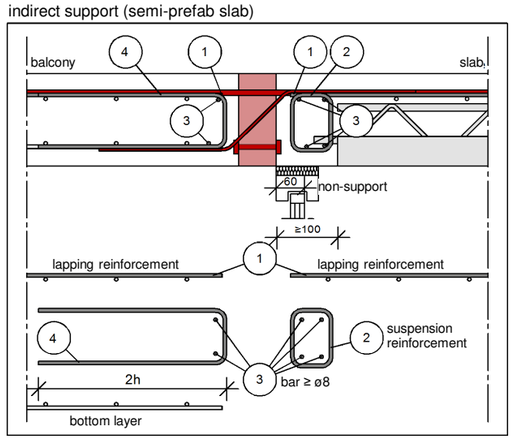

Note indirect support (semi-prefab slab):
The adviced u-bar reinforcement item ② is not replacing the required statical reinforcement of the beam. The reinforcement of the beam has to be calculated by the project engineer in additional.

Semi-prefab balcony
direct support: Egcobox in semi-prefab balcony

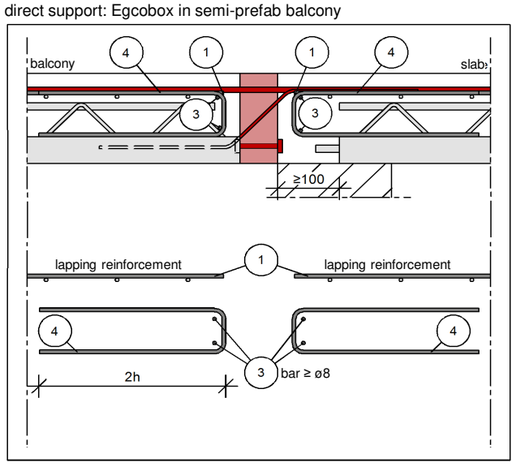

direct support: Egcobox with V_± in semi-prefab balcony

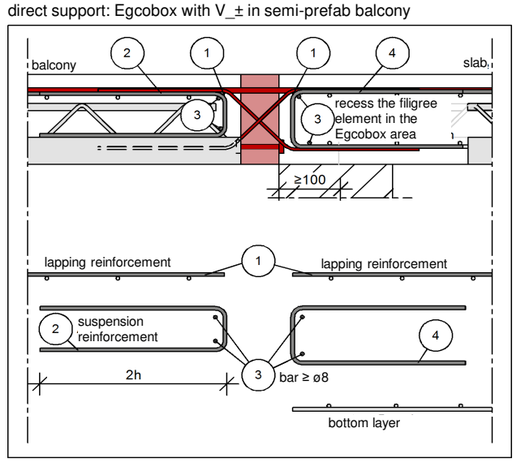

indirect support: Egcobox with V_± in semi-prefab balcony

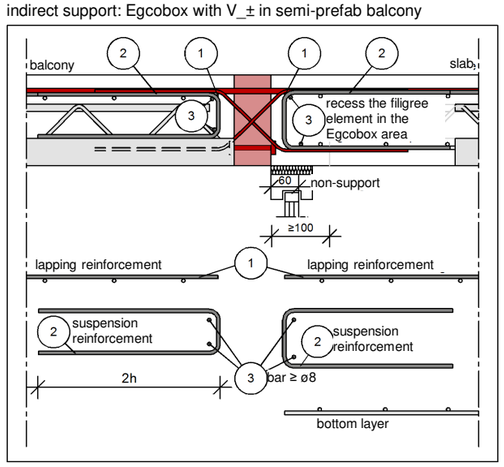

Note Egcobox in semi-prefab balcony:
It is advisable to include the constructive edging on the balcony side (item ④) or the suspension reinforcement (item ②) in the semi-prefab part.
For the Egcobox shear force levels VS± to V4±, a constructive edging on the balcony side is generally sufficient.

On-site reinforcement Egcobox® type MM - C25/30

for balconies with low offset of height

marginal conditions for execution:

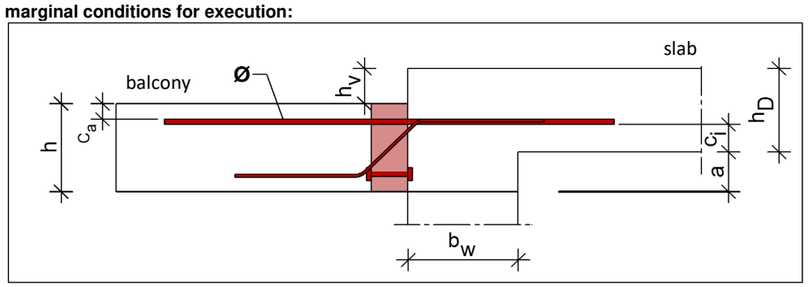

offset of height $h_v < h_D - c_a - d_s - c_i$

If $h_v \leq h_D - c_a - d_s - c_i$, the offset of height balcony can execute with a standard Egcobox®-element MM.

If the marginal conditions do not match, the Egcobox® should be designed with a offset of height MM-HV.

required minimum width of the joist b_W : 175 mm MM10-K bis MM60,
220 mm MM65 bis MM80-K

Egcobox type			MM10-K	MM20	MM25	MM30	MM35	MM45	MM50	MM55	MM60	MM65	MM70	MM75	MM80	MM80-K
length of element [mm]			**500**	**1000**	**1000**	**1000**	**1000**	**1000**	**1000**	**1000**	**1000**	**1000**	**1000**	**1000**	**1000**	**500**
reqired minimum width of joist b_w [mm]			175	175	175	175	175	175	175	175	175	220	220	220	220	220
Egcobox ø rebar [mm]			ø 8	ø 12	ø 12	ø 12	ø 12	ø 12	ø 12	ø 12	ø 12	ø 12	ø 12	ø 12	ø 12	ø 12
Egcobox l_0 rebar [mm]			475	580	580	580	580	580	580	580	580	580	580	580	580	580
item ① - lapping reinforcement / element																
≥ as [cm²] B500			2,81	4,52	5,65	5,78	6,79	7,22	8,66	10,11	11,24	12,13	13,02	13,87	14,73	7,32
suggested on-site reinforcement [mm]			ø 10	ø 12	ø 12	ø 12	ø 12	ø 12	ø 12	ø 12	ø 12	ø 12	ø 12	ø 12	ø 12	ø 12
item ⑤ - link reinforcement slabsides / element at <u>direct support</u> (all shear force level - a_s lapping reinforcement)																
offset height	**a= 50 mm**	≥ a_s [cm²] B500	0,78	1,25	1,56	1,60	1,88	2,01	2,42	2,83	3,15	2,56	2,75	2,95	3,13	1,56
offset height	**a= 100 mm**	≥ a_s [cm²] B500	1,89	3,03	3,79	3,90	4,58	4,87	5,89	6,87	7,64	6,23	6,69	7,16	7,60	3,78
offset height	**a= 200 mm**	≥ a_s [cm²] B500	4,10	6,60	8,24	8,48	9,96	10,60	12,81	14,95	16,63	13,56	14,55	15,58	16,55	8,22
item ⑥ - link reinforcement / element at <u>indirect support</u> (a_s lapping reinforcement + a_s transverse shear force)																
shear force	**a= 50 mm**		1,12+0,56	1,25+1,12	1,56+1,12	1,60+1,12	1,88+1,12	2,01+1,12	2,42+1,12	2,83+1,12	3,15+1,12	2,56+1,12	2,75+1,12	2,95+1,12	3,13+1,12	1,56+1,12
level	**a= 100 mm**	≥ a_s [cm²] B500	1,89+0,56	3,03+1,12	3,79+1,12	3,90+1,12	4,58+1,12	4,87+1,12	5,89+1,12	6,87+1,12	7,64+1,12	6,23+1,12	6,69+1,12	7,16+1,12	7,60+1,12	3,78+1,12
VS / VS±	**a= 200 mm**		4,10+0,56	6,60+1,12	8,24+1,12	8,48+1,12	9,96+1,12	10,60+1,12	12,81+1,12	14,95+1,12	16,63+1,12	13,56+1,12	14,55+1,12	15,58+1,12	16,55+1,12	8,22+1,12
shear force	**a= 50 mm**		1,12+1,00	1,25+1,99	1,56+1,99	1,60+1,99	1,88+1,99	2,01+1,99	2,42+1,99	2,83+1,99	3,15+1,99	2,56+1,99	2,75+1,99	2,95+1,99	3,13+1,99	1,56+1,99
level	**a= 100 mm**	≥ a_s [cm²] B500	1,89+1,00	3,03+1,99	3,79+1,99	3,90+1,99	4,58+1,99	4,87+1,99	5,89+1,99	6,87+1,99	7,64+1,99	6,23+1,99	6,69+1,99	7,16+1,99	7,60+1,99	3,78+1,99
V1 / V1±	**a= 200 mm**		4,10+1,00	6,60+1,99	8,24+1,99	8,48+1,99	9,96+1,99	10,60+1,99	12,81+1,99	14,95+1,99	16,63+1,99	13,56+1,99	14,55+1,99	15,58+1,99	16,55+1,99	8,22+1,99
shear force	**a= 50 mm**		1,12+1,49	1,25+2,99	1,56+2,99	1,60+2,99	1,88+2,99	2,01+2,99	2,42+2,99	2,83+2,99	3,15+2,99	2,56+2,99	2,75+2,99	2,95+2,99	3,13+2,99	1,56+3,11
level	**a= 100 mm**	≥ a_s [cm²] B500	1,89+1,49	3,03+2,99	3,79+2,99	3,90+2,99	4,58+2,99	4,87+2,99	5,89+2,99	6,87+2,99	7,64+2,99	6,23+2,99	6,69+2,99	7,16+2,99	7,60+2,99	3,78+3,11
V2 / V2±	**a= 200 mm**		4,10+1,49	6,60+2,99	8,24+2,99	8,48+2,99	9,96+2,99	10,60+2,99	12,81+2,99	14,95+2,99	16,63+2,99	13,56+2,99	14,55+2,99	15,58+2,99	16,55+2,99	8,22+3,11
shear force	**a= 50 mm**		1,12+1,99	1,25+3,98	1,56+3,98	1,60+3,98	1,88+3,98	2,01+3,98	2,42+3,98	2,83+3,98	3,15+3,98	2,56+3,98	2,75+3,98	2,95+3,98	3,13+3,98	-
level	**a= 100 mm**	≥ a_s [cm²] B500	1,89+1,99	3,03+3,98	3,79+3,98	3,90+3,98	4,58+3,98	4,87+3,98	5,89+3,98	6,87+3,98	7,64+3,98	6,23+3,98	6,69+3,98	7,16+3,98	7,60+3,98	-
V3 / V3±	**a= 200 mm**		4,10+1,99	6,60+3,98	8,24+3,98	8,48+3,98	9,96+3,98	10,60+3,98	12,81+3,98	14,95+3,98	16,63+3,98	13,56+3,98	14,55+3,98	15,58+3,98	16,55+3,98	-
shear force	**a= 50 mm**		-	1,25+6,13	1,56+6,13	1,60+6,13	1,88+6,22	2,01+6,22	2,42+6,22	2,83+6,22	3,15+6,22	2,56+6,22	2,75+6,22	2,95+6,22	3,13+6,22	1,56+3,11
level	**a= 100 mm**	≥ a_s [cm²] B500	-	3,03+6,13	3,79+6,13	3,90+6,13	4,58+6,22	4,87+6,22	5,89+6,22	6,87+6,22	7,64+6,22	6,23+6,22	6,69+6,22	7,16+6,22	7,60+6,22	3,78+3,11
V4 / V4±	**a= 200 mm**		-	6,60+6,13	8,24+6,13	8,48+6,13	9,96+6,22	10,60+6,22	12,81+6,22	14,95+6,22	16,63+6,22	13,56+6,22	14,55+6,22	15,58+6,22	16,55+6,22	8,22+3,11
shear force	**a= 50 mm**		1,12+0,56	1,25+1,12	1,56+1,12	1,60+1,12	1,88+1,12	2,01+1,12	2,42+1,12	2,83+1,12	3,15+1,12	2,56+1,12	2,75+1,12	2,95+1,12	3,13+1,12	1,56+0,56
level	**a= 100 mm**	≥ a_s [cm²] B500	1,89+0,56	3,03+1,12	3,79+1,12	3,90+1,12	4,58+1,12	4,87+1,12	5,89+1,12	6,87+1,12	7,64+1,12	6,23+1,12	6,69+1,12	7,16+1,12	7,60+1,12	3,78+0,56
V6±	**a= 200 mm**		4,10+0,56	6,60+1,12	8,24+1,12	8,48+1,12	9,96+1,12	10,60+1,12	12,81+1,12	14,95+1,12	16,63+1,12	13,56+1,12	14,55+1,12	15,58+1,12	16,55+1,12	8,22+0,56
shear force	**a= 50 mm**		1,12+1,12	1,25+2,24	1,56+2,24	1,60+2,24	1,88+2,24	2,01+2,24	2,42+2,24	2,83+2,99	3,15+2,99	2,56+2,99	2,75+2,99	2,95+2,99	3,13+2,99	1,56+1,49
level	**a= 100 mm**	≥ a_s [cm²] B500	1,89+1,12	3,03+2,24	3,79+2,24	3,90+2,24	4,58+2,24	4,87+2,24	5,89+2,24	6,87+2,99	7,64+2,99	6,23+2,99	6,69+2,99	7,16+2,99	7,60+2,99	3,78+1,49
V7±	**a= 200 mm**		4,10+1,12	6,60+2,24	8,24+2,24	8,48+2,24	9,96+2,24	10,60+2,24	12,81+2,24	14,95+2,99	16,63+2,99	13,56+2,99	14,55+2,99	15,58+2,99	16,55+2,99	8,22+1,49
shear force	**a= 50 mm**		1,12+2,33	1,25+4,66	1,56+4,66	1,60+4,66	1,88+4,66	2,01+4,66	2,42+4,66	2,83+4,66	3,15+4,66	2,56+4,66	2,75+4,66	2,95+4,66	3,13+4,66	1,56+2,33
level	**a= 100 mm**	≥ a_s [cm²] B500	1,89+2,33	3,03+4,66	3,79+4,66	3,90+4,66	4,58+4,66	4,87+4,66	5,89+4,66	6,87+4,66	7,64+4,66	6,23+4,66	6,69+4,66	7,16+4,66	7,60+4,66	3,78+2,33
V8±	**a= 200 mm**		4,10+2,33	6,60+4,66	8,24+4,66	8,48+4,66	9,96+4,66	10,60+4,66	12,81+4,66	14,95+4,66	16,63+4,66	13,56+4,66	14,55+4,66	15,58+4,66	16,55+4,66	8,22+2,33

item ③+④ - structural reinforcement
In the slab edge of the u-bar reinforcement is respectively to arrange ≥ ø8 (item ③).
On the balcony side, it is recommended to design the edge reinforcement for the shear force V_{Ed} / f_{yd} ≥ ø6/250 mm according to EN 1992 (item ④ - vs. item ②).

The suggested lapping reinforcement (α_6=1,5) is selected (item ①) to transfer 100% of the M_{Rd} of the Egcobox℠ (height Egcobox℠ = height floor). An other reinforcement selection is possible.
In case of an other reinforcement selection shall be approved the lapping reinforcement in accordance with EN 1992. The reinforcement cross section or the lapping length can be derated in reference of utilization proportional M_{Ed} / M_{Rd}.
The lapping reinforcement must be approved by the structural engineer.

The proposed steel cross-section a_s (item ②) covers the maximum design transverse force V_{Rd} of the Egcobox℠. In case of smaller actions, the edge reinforcement may be determined with V_{Ed} / f_{yd} ≥ ø6/250 mm.

Item ⑤ or item ⑥ applies to the specified required minimum widths of the joist (b_w) and the height of the offset (a= 50 mm; a=100 mm; a= 200 mm). For larger beam widths, a reduction of the required reinforcement is possible.
For balcony offset dimensions between 20 mm < a ≤ 230 mm, interpolation is possible; recommended minimum reinforcement ø6/250 mm.
For offset dimensions < 20 mm, item ⑤ or ⑥ can be reduced to a structural edge reinforcement (direct bearing - item ④) or suspension reinforcement (indirect bearing - item ②).

The specified connection reinforcement is to be used exclusively for The force transmission into the slab and the reinforcement required for this (item ⑧) must be verified by the structural engineer.

The specifications apply to good bonding conditions.

The specified connection reinforcement is required exclusively for the static transfer of the cutting forces from the cantilever slab connection.
The statically required beam-reinforcement is not taken into account and shown. This must be additionally dimensioned by the structural engineer.
The specified connection reinforcement is only a suggestion. The structural engineer in charge must check the feasibility of the design.
The distribution of the Egcobox℠ reinforcement and the required minimum beam widths must be observed. In the case of alternating shear forces, the embedment length of the shear force bar must be taken into account when selecting the beam width.

design proposal

direct support

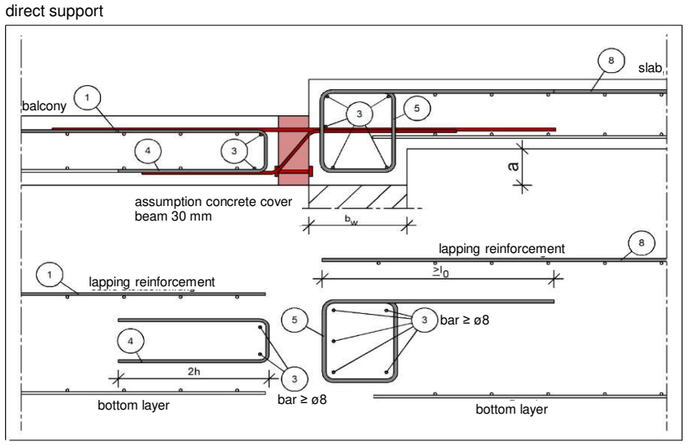

indirect support

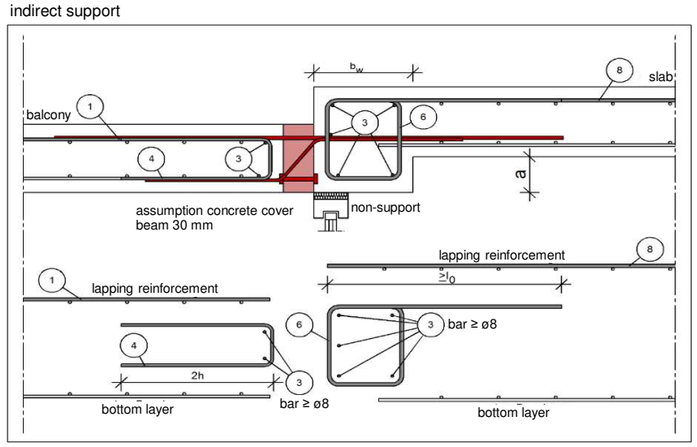

instruction notes lapping reinforcement

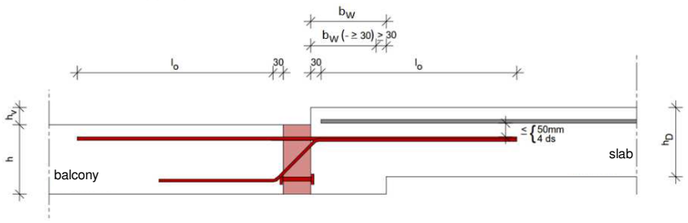

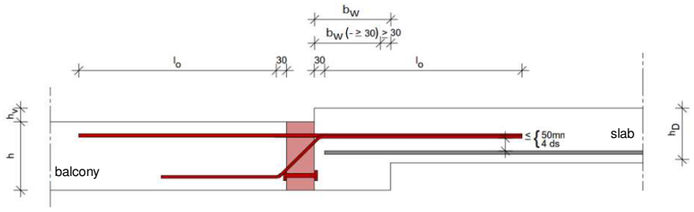

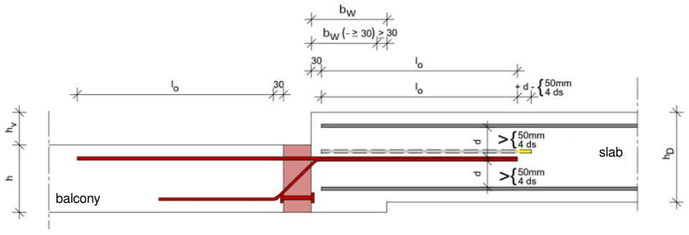

Design table Egcobox® type MM-CO - C25/30

for cantilever slabs for transmission of moment and shear force in corner situation, insulation 80 mm

	Egcobox type			MM10-CO-L or MM10-CO-R		MM20-CO-L or MM20-CO-R		MM30-CO-L or MM30-CO-R	
	length of element [mm]			500	580	500	580	600	680
	concrete cover [mm] 1. layer (2. layer)			consists of subcomponents: MM10-CO-S1L or MM10-CO-S1R 1. layer	MM10-CO-S2R or MM10-CO-S2L 2. layer	consists of subcomponents: MM20-CO-S1L or MM20-CO-S1R 1. layer	MM20-CO-S2R or MM20-CO-S2L 2. layer	consists of subcomponents: MM30-CO-S1L or MM30-CO-S1R 1. layer	MM30-CO-S2R or MM30-CO-S2L 2. layer
	C30 (C45)	C35 (C50)	C50 (C65)	M_{Rd} [kNm/element]					
height of connection [mm] good bonding conditions		**160**	175	-	-	-	-	-	-
	160	165	**180**	-	-	-	-	-	-
	165	170	185	-	-	-	-	-	-
	170	175	190	-19,5	-16,5	-28,5	-26,6	-34,1	-31,3
	175	**180**	195	-20,5	-17,5	-30,1	-28,2	-36,0	-33,2
	180	185	**200**	-21,4	-18,5	-31,8	-29,8	-37,9	-35,2
	185	190	205	-22,4	-19,5	-33,4	-31,4	-39,8	-37,1
	190	195	210	-23,4	-20,5	-35,0	-33,1	-41,7	-39,0
	195	**200**	215	-24,4	-21,4	-36,7	-34,7	-43,6	-40,9
	200	205	**220**	-25,4	-22,4	-38,3	-36,3	-45,5	-42,8
	205	210	225	-26,4	-23,4	-39,9	-37,9	-47,4	-44,7
	210	215	230	-27,3	-24,4	-41,5	-39,6	-49,4	-46,6
	215	**220**	235	-28,3	-25,4	-43,2	-41,2	-51,3	-48,5
	220	225	**240**	-29,3	-26,4	-44,8	-42,8	-53,2	-50,4
	225	230	245	-30,3	-27,3	-46,4	-44,4	-55,1	-52,4
	230	235	250	-31,3	-28,3	-48,1	-46,1	-57,0	-54,3
	235	**240**	255	-32,3	-29,3	-49,7	-47,7	-58,9	-56,2
	240	245	**260**	-33,2	-30,3	-51,3	-49,3	-60,8	-58,1
	245	250	265	-34,2	-31,3	-52,9	-50,9	-62,7	-60,0
	250	255	270	-35,2	-32,3	-54,6	-52,6	-64,6	-61,9
	255	**260**	275	-36,2	-33,2	-56,2	-54,2	-66,6	-63,8
	260	265	**280**	-37,2	-34,2	-57,8	-55,8	-68,5	-65,7
	265	270	285	-38,2	-35,2	-59,4	-57,4	-70,4	-67,6
	270	275	290	-39,1	-36,2	-61,1	-59,1	-72,3	-69,6
	275	**280**	295	-40,1	-37,2	-62,7	-60,7	-74,2	-71,5
	280	285	**300**	-41,1	-38,2	-64,3	-62,3	-76,1	-73,4
	285	290		-42,1	-39,1	-65,9	-63,9	-78,0	-75,3
	290	295		-43,1	-40,1	-67,6	-65,6	-79,9	-77,2
	295	**300**		-44,1	-41,1	-69,2	-67,2	-81,9	-79,1
	300			-45,0	-42,1	-70,8	-68,8	-83,8	-81,0

Shear force level		concrete cover [mm] 30 (C45)	35 (C50)	50 (C65)	V_{Rd} [kN/element]					
height of connection [mm] good bonding conditions	VS	170-185	175-190	190-205	64,9	64,9	64,9	64,9	64,9	64,9
		190-205	195-210	210-225	64,9	64,9	64,9	64,9	64,9	64,9
		210-300	215-300	230-300	64,9	64,9	64,9	64,9	64,9	64,9
	V1	170-185	175-190	190-205	95,6	95,6	95,6	95,6	95,6	95,6
		190-205	195-210	210-225	135,2	135,2	135,2	135,2	135,2	135,2
		210-300	215-300	230-300	135,2	135,2	135,2	135,2	135,2	135,2
	V2	170-185	175-190	190-205	-	-	-	-	-	-
		190-205	195-210	210-225	198,0	198,0	198,0	198,0	198,0	198,0
		210-300	215-300	230-300	198,0	198,0	198,0	198,0	198,0	198,0

The choice of the Egcobox® as a complete element, the specification of the concrete cover of the 1st layer is decisive, e.g. MM20-CO-L-VS-C35-h200, consisting of subcomponents MM20-CO-S1L-VS-C35-h200, MM20-CO-S2R-VS-C50-h200; or MM20-CO-R-VS-C35-h200, consisting of subcomponents MM20-CO-S1R-VS-C35-h200, MM20-CO-S2L-VS-C50-h200. "L" and "R" indicate the arrangement of the 1st layer (arrangement of 1st layer left or right of the corner). The Egcobox® corner elements can be planned as a complete element or, for example, as a partial element for centered load requirements.

Reinforcement Egcobox® type MM-CO

Egcobox type	MM10-CO-L or MM10-CO-R		MM20-CO-L or MM20-CO-R		MM30-CO-L or MM30-CO-R	
length of element [mm]	**500**	**580**	**500**	**580**	**600**	**680**
	consists of subcomponents:		consists of subcomponents:		consists of subcomponents:	
	MM10-CO-S1L or MM10-CO-S1R 1. layer	MM10-CO-S2R or MM10-CO-S2L 2. layer	MM20-CO-S1L or MM20-CO-S1R 1. layer	MM20-CO-S2R or MM20-CO-S2L 2. layer	MM30-CO-S1L or MM30-CO-S1R 1. layer	MM30-CO-S2R or MM30-CO-S2L 2. layer
tensile bars	4 ø 12	4 ø 12	5 ø 14	5 ø 14	6 ø 14	6 ø 14
length of tensile bars [mm]	1300	1300	1580	1580	1580	1580
compression bearings	4 ø 12	4 ø 12	2 ø 12	2 ø 12	3 ø 12	3 ø 12
compression bars	-	-	3 ø 14	3 ø 14	3 ø 14	3 ø 14
length of compression bars [mm]	-	-	1580	1580	1580	1580
shear force bars VS	3 ø 8	3 ø 8	3 ø 8	3 ø 8	3 ø 8	3 ø 8
shear force bars V1	4 ø 10	4 ø 10	4 ø 10	4 ø 10	4 ø 10	4 ø 10
shear force bars V2	6 ø 10	6 ø 10	6 ø 10	6 ø 10	6 ø 10	6 ø 10
applicable expansion joint distances [m]	**11,7 / 2**	**11,7 / 2**	**11,7 / 2**	**11,7 / 2**	**11,7 / 2**	**11,7 / 2**

Placement

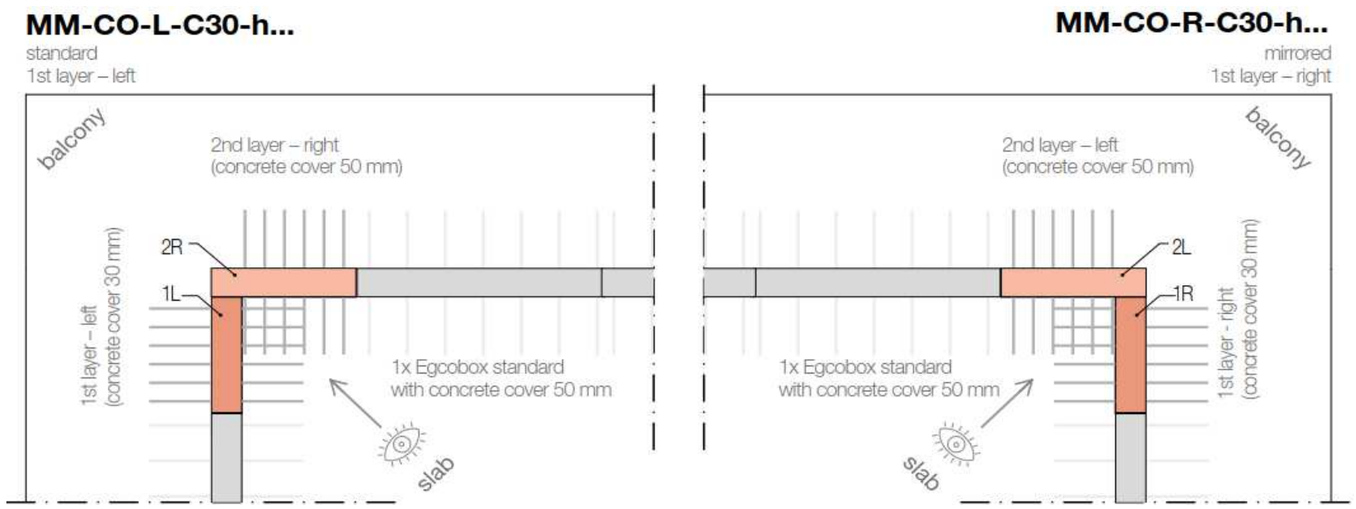

On-site reinforcement Egcobox® type MM-CO - C25/30

Egcobox type	MM10-CO-L or MM10-CO-R		MM20-CO-L or MM20-CO-R		MM30-CO-L or MM30-CO-R	
length of element [mm]	**500**	**580**	**500**	**580**	**600**	**680**
	consists of subcomponents:		consists of subcomponents:		consists of subcomponents:	
	MM10-CO-S1L or MM10-CO-S1R 1. layer	MM10-CO-S2R or MM10-CO-S2L 2. layer	MM20-CO-S1L or MM20-CO-S1R 1. layer	MM20-CO-S2R or MM20-CO-S2L 2. layer	MM30-CO-S1L or MM30-CO-S1R 1. layer	MM30-CO-S2R or MM30-CO-S2L 2. layer
Egcobox ø rebar [mm]	ø 12	ø 12	ø 14	ø 14	ø 14	ø 14
Egcobox l_0 rebar [mm]	580	580	720	720	720	720
item ① - lapping reinforcement / element						
≥ a_s [cm²] B500	4,52	4,52	7,47	7,47	8,79	8,79
suggested on-site reinforcement [mm]	ø 12	ø 12	ø 14	ø 14	ø 14	ø 14
item ② - suspension reinforcement shear force / element						
shear force level VS ≥ a_s [cm²] B500	1,49	1,49	1,49	1,49	1,49	1,49
shear force level V1 ≥ a_s [cm²] B500	3,11	3,11	3,11	3,11	3,11	3,11
shear force level V2 ≥ a_s [cm²] B500	4,55	4,55	4,55	4,55	4,55	4,55

item ③+④ - structural reinforcement
In the slab edge of the u-bar reinforcement is respectively to arrange ≥ ø8 (item ③).
On the balcony side, it is recommended to design the edge reinforcement for the shear force V_{Ed} / f_{yd} ≥ ø6/250 mm according to EN 1992 (item ④ - vs. item ②).

The suggested lapping reinforcement (α_6=1,5) is selected (item ①) to transfer 100% of the M_{Rd} of the Egcobox® (height Egcobox® = height floor). An other reinforcement selection is possible.
In case of an other reinforcement selection shall be approved the lapping reinforcement in accordance with EN 1992. The reinforcement cross section or the lapping length can be derated in reference of utilization proportional M_{Ed} / M_{Rd}.
The lapping reinforcement must be approved by the structural engineer.

The proposed steel cross-section a_s (item ②) covers the maximum design transverse force V_{Rd} of the Egcobox®. In case of smaller actions, the edge reinforcement may be determined with V_{Ed} / f_{yd} ≥ ø6/250 mm.

The specifications apply to good bonding conditions.

design proposal

top view

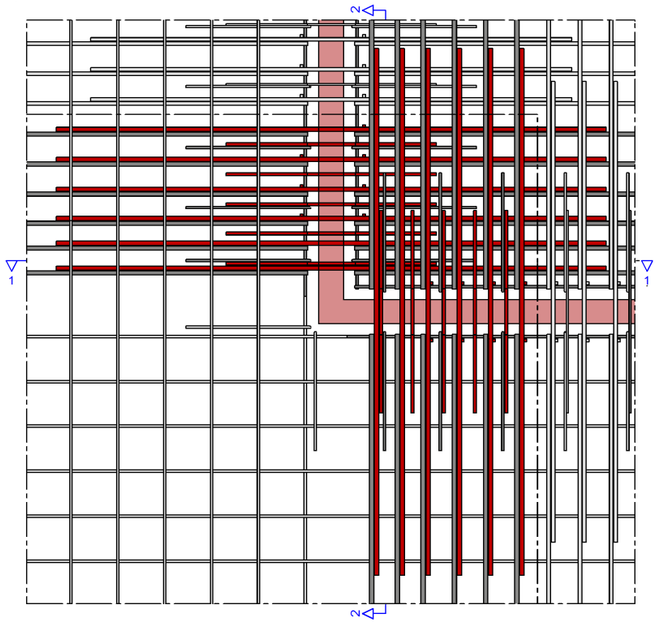

section 1-1; direct support

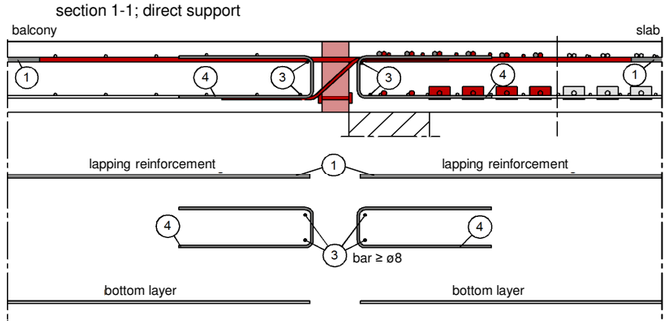

section 2-2; direct support

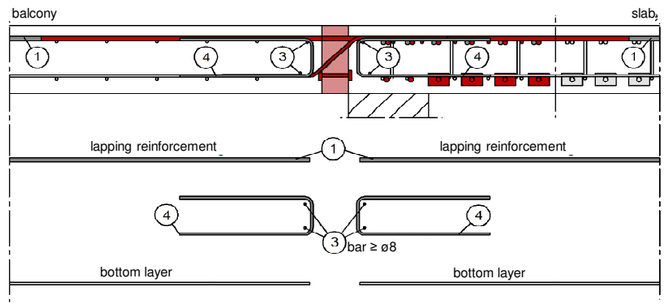

section 1-1; indirect support

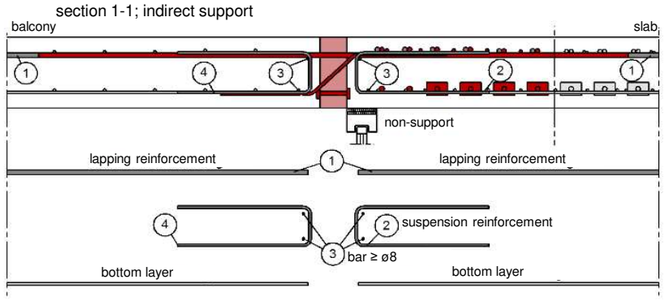

section 2-2; indirect support

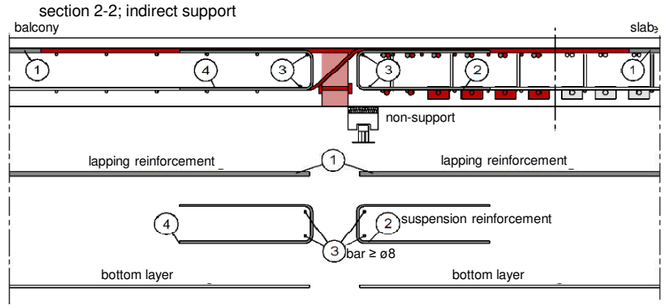

Design table Egcobox® type MM-HVS / -WOS - C25/30

for cantilever slabs with height offset or wall connection for transmission of moment and shear force, insulation 80 mm

	Egcobox type			MM10-K	MM20	MM25	MM30	MM35	MM45	MM50	MM55	MM60
				-HVS / -WOS								
	length of element [mm]			500	1000	1000	1000	1000	1000	1000	1000	1000
	concrete cover [mm]			M_{Rd} [kNm/element]								
	C30	C35	C50									
height of connection [mm] good bonding conditions		**160**	175	-10,4	-15,8	-20,9	-23,5	-26,3	-28,9	-31,6	-36,8	-37,2
	160	165	**180**	-11,1	-16,7	-22,1	-24,9	-27,8	-30,6	-33,4	-39,0	-39,4
	165	170	185	-11,7	-17,6	-23,3	-26,2	-29,4	-32,3	-35,2	-41,1	-41,6
	170	175	190	-12,3	-18,5	-24,5	-27,6	-30,9	-34,0	-37,1	-43,3	-43,8
	175	**180**	195	-12,9	-19,5	-25,7	-29,0	-32,4	-35,7	-38,9	-45,4	-46,0
	180	185	**200**	-13,5	-20,4	-27,0	-30,3	-34,0	-37,4	-40,8	-47,5	-48,2
	185	190	205	-14,1	-21,3	-28,2	-31,7	-35,5	-39,0	-42,6	-49,7	-50,4
	190	195	210	-14,7	-22,2	-29,4	-33,1	-37,0	-40,7	-44,4	-51,8	-52,6
	195	**200**	215	-15,3	-23,1	-30,6	-34,4	-38,6	-42,4	-46,3	-54,0	-54,8
	200	205	**220**	-15,9	-24,0	-31,8	-35,8	-40,1	-44,1	-48,1	-56,1	-57,0
	205	210	225	-16,5	-25,0	-33,0	-37,2	-41,6	-45,8	-49,9	-58,3	-59,2
	210	215	230	-17,1	-25,9	-34,2	-38,5	-43,1	-47,5	-51,8	-60,4	-61,3
	215	**220**	235	-17,7	-26,8	-35,5	-39,9	-44,7	-49,1	-53,6	-62,5	-63,5
	220	225	**240**	-18,3	-27,7	-36,7	-41,3	-46,2	-50,8	-55,4	-64,7	-65,7
	225	230	245	-18,9	-28,6	-37,9	-42,6	-47,7	-52,5	-57,3	-66,8	-67,9
	230	235	250	-19,6	-29,6	-39,1	-44,0	-49,3	-54,2	-59,1	-69,0	-70,1
	235	**240**	255	-20,2	-30,5	-40,3	-45,4	-50,8	-55,9	-60,9	-71,1	-72,3
	240	245	**260**	-20,8	-31,4	-41,5	-46,7	-52,3	-57,6	-62,8	-73,2	-74,5
	245	250	265	-21,4	-32,3	-42,7	-48,1	-53,8	-59,2	-64,6	-75,4	-76,7
	250	255	270	-22,0	-33,2	-44,0	-49,5	-55,4	-60,9	-66,5	-77,5	-78,9
	255	**260**	275	-22,6	-34,1	-45,2	-50,8	-56,9	-62,6	-68,3	-79,7	-81,1
	260	265	**280**	-23,2	-35,1	-46,4	-52,2	-58,4	-64,3	-70,1	-81,8	-83,3
	265	270	285	-23,8	-36,0	-47,6	-53,6	-60,0	-66,0	-72,0	-84,0	-85,4
	270	275	290	-24,4	-36,9	-48,8	-54,9	-61,5	-67,6	-73,8	-86,1	-87,6
	275	**280**	295	-25,0	-37,8	-50,0	-56,3	-63,0	-69,3	-75,6	-88,2	-89,8
	280	285	**300**	-25,6	-38,7	-51,2	-57,7	-64,6	-71,0	-77,5	-90,4	-92,0
	285	290		-26,2	-39,7	-52,5	-59,0	-66,1	-72,7	-79,3	-92,5	-94,2
	290	295		-26,8	-40,6	-53,7	-60,4	-67,6	-74,4	-81,1	-94,7	-96,4
	295	**300**		-27,4	-41,5	-54,9	-61,8	-69,1	-76,1	-83,0	-96,8	-98,6
	300			-28,1	-42,4	-56,1	-63,1	-70,7	-77,7	-84,8	-98,9	-100,8

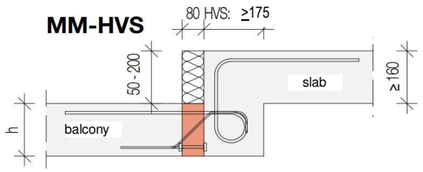

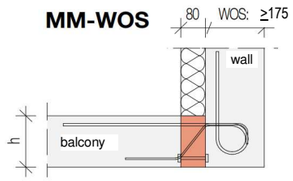

Shear force level		concrete cover [mm]			V_{Rd} [kN/element]								
		C30	C35	C50									
height of connection [mm] good bonding conditions	VS	160-190	160-195	175-210	24,3	48,7	48,7	48,7	48,7	48,7	48,7	48,7	48,7
		195-300	200-300	215-300	24,3	48,7	48,7	48,7	48,7	48,7	48,7	48,7	48,7
	V1	160-190	160-195	175-210	43,3	86,5	86,5	86,5	86,5	86,5	86,5	86,5	86,5
		195-300	200-300	215-300	43,3	86,5	86,5	86,5	86,5	86,5	86,5	86,5	86,5
	V2	160-190	160-195	175-210	64,9	129,8	129,8	129,8	129,8	129,8	129,8	129,8	129,8
		195-300	200-300	215-300	64,9	129,8	129,8	129,8	129,8	129,8	129,8	129,8	129,8
	V3	160-190	160-195	175-210	86,5	173,1	173,1	173,1	173,1	173,1	173,1	173,1	173,1
		195-300	200-300	215-300	86,5	173,1	173,1	173,1	173,1	173,1	173,1	173,1	173,1
	V4	175-190	180-195	195-210	-	242,9	242,9	270,4	270,4	270,4	270,4	270,4	270,4
		195-300	200-300	215-300	-	242,9	242,9	270,4	270,4	270,4	270,4	270,4	270,4
	V6±	160-190	160-195	175-210	+24,3/ -24,3	+48,7/ -48,7	+48,7/ -48,7	+48,7/ -48,7	+48,7/ -48,7	+48,7/ -48,7	+48,7/ -48,7	+48,7/ -48,7	+48,7/ -48,7
		195-300	200-300	215-300	+24,3/ -24,3	+48,7/ -48,7	+48,7/ -48,7	+48,7/ -48,7	+48,7/ -48,7	+48,7/ -48,7	+48,7/ -48,7	+48,7/ -48,7	+48,7/ -48,7
	V7±	160-190	160-195	175-210	+48,7/ -36,5	+97,4/ -73	+97,4/ -73	+97,4/ -73	+97,4/ -73	+97,4/ -73	+97,4/ -73	+129,8/ -86,5	+129,8/ -86,5
		195-300	200-300	215-300	+48,7/ -36,5	+97,4/ -73	+97,4/ -73	+97,4/ -73	+97,4/ -73	+97,4/ -73	+97,4/ -73	+129,8/ -86,5	+129,8/ -86,5
	V8±	175-190	180-195	195-210	+101,4/ -101,4	+202,8/ -202,8	+202,8/ -202,8	+202,8/ -202,8	+202,8/ -202,8	+202,8/ -202,8	+202,8/ -202,8	+202,8/ -202,8	+202,8/ -202,8
		195-300	200-300	215-300	+101,4/ -101,4	+202,8/ -202,8	+202,8/ -202,8	+202,8/ -202,8	+202,8/ -202,8	+202,8/ -202,8	+202,8/ -202,8	+202,8/ -202,8	+202,8/ -202,8

Shear force level VS to V4 also possible with lifting shear force (-24.3 kN/element depending on height of connection/concrete cover) (designation: VS±, V1±, V2±, V3± or V4±)

Reinforcement Egcobox® type MM-HVS / -WOS

Egcobox type	MM10-K	MM20	MM25	MM30	MM35	MM45	MM50	MM55	MM60
	-HVS / -WOS								
length of element [mm]	**500**	**1000**	**1000**	**1000**	**1000**	**1000**	**1000**	**1000**	**1000**
wall / beam width b_w: -HVS / -WOS [mm]	**≥175**								
tensile bars	4 ø 8	6 ø 8	8 ø 8	9 ø 8	10 ø 8	11 ø 8	12 ø 8	14 ø 8	10 ø 10
length of tensile bars [mm]	depending on bending form								
compression bearings	2 ø 12	4 ø 12	4 ø 12	5 ø 12	7 ø 12	8 ø 12	9 ø 12	12 ø 12	12 ø 12
shear force bars VS	2 ø 6	4 ø 6	4 ø 6	4 ø 6	4 ø 6	4 ø 6	4 ø 6	4 ø 6	4 ø 6
shear force bars V1	2 ø 8	4 ø 8	4 ø 8	4 ø 8	4 ø 8	4 ø 8	4 ø 8	4 ø 8	4 ø 8
shear force bars V2	3 ø 8	6 ø 8	6 ø 8	6 ø 8	6 ø 8	6 ø 8	6 ø 8	6 ø 8	6 ø 8
shear force bars V3	4 ø 8	8 ø 8	8 ø 8	8 ø 8	8 ø 8	8 ø 8	8 ø 8	8 ø 8	8 ø 8
shear force bars V4	-	8 ø 10	8 ø 10	8 ø 10	8 ø 10	8 ø 10	8 ø 10	8 ø 10	8 ø 10
shear force bars VS±	-	4 ø6 / 2 ø6	4 ø6 / 2 ø6	4 ø6 / 2 ø6	4 ø6 / 2 ø6	4 ø6 / 2 ø6	4 ø6 / 2 ø6	4 ø6 / 2 ø6	4 ø6 / 2 ø6
shear force bars V1±	-	4 ø8 / 2 ø6	4 ø8 / 2 ø6	4 ø8 / 2 ø6	4 ø8 / 2 ø6	4 ø8 / 2 ø6	4 ø8 / 2 ø6	4 ø8 / 2 ø6	4 ø8 / 2 ø6
shear force bars V2±	-	6 ø8 / 2 ø6	6 ø8 / 2 ø6	6 ø8 / 2 ø6	6 ø8 / 2 ø6	6 ø8 / 2 ø6	6 ø8 / 2 ø6	6 ø8 / 2 ø6	6 ø8 / 2 ø6
shear force bars V3±	-	8 ø8 / 2 ø6	8 ø8 / 2 ø6	8 ø8 / 2 ø6	8 ø8 / 2 ø6	8 ø8 / 2 ø6	8 ø8 / 2 ø6	8 ø8 / 2 ø6	8 ø8 / 2 ø6
shear force bars V4±	-	8 ø10 / 2 ø6	8 ø10 / 2 ø6	8 ø10 / 2 ø6	8 ø10 / 2 ø6	8 ø10 / 2 ø6	8 ø10 / 2 ø6	8 ø10 / 2 ø6	8 ø10 / 2 ø6
shear force bars V6±	2 ø6 / 2 ø6	4 ø6 / 4 ø6	4 ø6 / 4 ø6	4 ø6 / 4 ø6	4 ø6 / 4 ø6	4 ø6 / 4 ø6	4 ø6 / 4 ø6	4 ø6 / 4 ø6	4 ø6 / 4 ø6
shear force bars V7±	4 ø6 / 3 ø6	8 ø6 / 6 ø6	8 ø6 / 6 ø6	8 ø6 / 6 ø6	8 ø6 / 6 ø6	8 ø6 / 6 ø6	8 ø6 / 6 ø6	6 ø8 / 4 ø8	6 ø8 / 4 ø8
shear force bars V8±	3 ø10 / 3 ø10	6 ø10 / 6 ø10	6 ø10 / 6 ø10	6 ø10 / 6 ø10	6 ø10 / 6 ø10	6 ø10 / 6 ø10	6 ø10 / 6 ø10	6 ø10 / 6 ø10	6 ø10 / 6 ø10
applicable expansion joint distances [m]	**11,7**	**11,7**	**11,7**	**11,7**	**11,7**	**11,7**	**11,7**	**11,7**	**11,7**

Torsion of the slab in the area of the insulation joint - Egcobox® type MM-HVS / -WOS

	Egcobox type			MM10-K	MM20	MM25	MM30	MM35	MM45	MM50	MM55	MM60
				-HVS / -WOS								
	length of element [mm]			**500**	**1000**	**1000**	**1000**	**1000**	**1000**	**1000**	**1000**	**1000**
	concrete cover [mm]			**banking factor k [1/kNm]**								
	C30	**C35**	**C50**									
height of connection [mm] good bonding conditions		**160**	175	1,308	0,822	0,654	0,568	0,489	0,442	0,403	0,338	0,359
	160	165	**180**	1,168	0,734	0,584	0,507	0,437	0,394	0,360	0,302	0,321
	165	170	185	1,049	0,660	0,525	0,456	0,392	0,354	0,323	0,271	0,288
	170	175	190	0,948	0,596	0,474	0,412	0,354	0,320	0,292	0,245	0,260
	175	**180**	195	0,861	0,541	0,430	0,374	0,322	0,291	0,265	0,222	0,236
	180	185	**200**	0,785	0,493	0,392	0,341	0,293	0,265	0,242	0,203	0,215
	185	190	205	0,719	0,452	0,359	0,312	0,269	0,243	0,221	0,186	0,196
	190	195	210	0,661	0,415	0,330	0,287	0,247	0,223	0,203	0,171	0,180
	195	**200**	215	0,609	0,383	0,305	0,265	0,228	0,206	0,188	0,157	0,166
	200	205	**220**	0,564	0,354	0,282	0,245	0,211	0,190	0,174	0,146	0,154
	205	210	225	0,523	0,329	0,261	0,227	0,195	0,177	0,161	0,135	0,142
	210	215	230	0,486	0,306	0,243	0,211	0,182	0,164	0,150	0,126	0,132
	215	**220**	235	0,454	0,285	0,227	0,197	0,170	0,153	0,140	0,117	0,123
	220	225	**240**	0,424	0,267	0,212	0,184	0,159	0,143	0,131	0,110	0,115
	225	230	245	0,397	0,250	0,199	0,173	0,149	0,134	0,122	0,103	0,108
	230	235	250	0,373	0,235	0,187	0,162	0,139	0,126	0,115	0,096	0,101
	235	**240**	255	0,351	0,221	0,175	0,152	0,131	0,119	0,108	0,091	0,095
	240	245	**260**	0,331	0,208	0,165	0,144	0,124	0,112	0,102	0,085	0,090
	245	250	265	0,312	0,196	0,156	0,136	0,117	0,105	0,096	0,081	0,085
	250	255	270	0,295	0,186	0,148	0,128	0,110	0,100	0,091	0,076	0,080
	255	**260**	275	0,280	0,176	0,140	0,121	0,105	0,094	0,086	0,072	0,076
	260	265	**280**	0,265	0,167	0,133	0,115	0,099	0,090	0,082	0,069	0,072
	265	270	285	0,252	0,158	0,126	0,109	0,094	0,085	0,078	0,065	0,068
	270	275	290	0,239	0,150	0,120	0,104	0,089	0,081	0,074	0,062	0,065
	275	**280**	295	0,228	0,143	0,114	0,099	0,085	0,077	0,070	0,059	0,062
	280	285	**300**	0,217	0,137	0,109	0,094	0,081	0,073	0,067	0,056	0,059
	285	290		0,207	0,130	0,104	0,090	0,077	0,070	0,064	0,054	0,056
	290	295		0,198	0,124	0,099	0,086	0,074	0,067	0,061	0,051	0,054
	295	**300**		0,189	0,119	0,095	0,082	0,071	0,064	0,058	0,049	0,051
	300			0,181	0,114	0,091	0,079	0,068	0,061	0,056	0,047	0,049

Rotation spring stiffness Egcobox® type MM-HVS / -WOS

	Egcobox type			MM10-K	MM20	MM25	MM30	MM35	MM45	MM50	MM55	MM60
				-HVS / -WOS								
	length of element [mm]			500	1000	1000	1000	1000	1000	1000	1000	1000
	concrete cover [mm]			Rotation spring stiffness [kNm/rad/Element]								
	C30	C35	C50									
height of connection [mm] good bonding conditions		**160**	175	765	1217	1530	1761	2046	2265	2484	2958	2783
	160	165	**180**	856	1362	1713	1972	2290	2536	2781	3312	3119
	165	170	185	953	1516	1906	2194	2549	2822	3095	3686	3476
	170	175	190	1055	1678	2110	2429	2821	3124	3425	4080	3851
	175	**180**	195	1162	1848	2324	2675	3108	3441	3773	4494	4246
	180	185	**200**	1274	2027	2548	2934	3408	3773	4137	4928	4660
	185	190	205	1391	2214	2783	3204	3722	4121	4518	5382	5093
	190	195	210	1514	2409	3028	3486	4049	4484	4916	5857	5546
	195	**200**	215	1642	2612	3283	3780	4391	4862	5331	6351	6018
	200	205	**220**	1775	2823	3549	4086	4746	5255	5763	6865	6509
	205	210	225	1913	3043	3825	4404	5115	5664	6211	7399	7019
	210	215	230	2056	3271	4112	4734	5498	6088	6676	7953	7548
	215	**220**	235	2204	3507	4408	5075	5895	6528	7158	8527	8097
	220	225	**240**	2358	3751	4715	5429	6306	6982	7656	9121	8665
	225	230	245	2516	4003	5033	5794	6731	7452	8172	9735	9253
	230	235	250	2680	4264	5361	6172	7169	7938	8704	10369	9859
	235	**240**	255	2849	4533	5699	6561	7621	8439	9253	11023	10485
	240	245	**260**	3024	4810	6047	6962	8087	8955	9819	11697	11130
	245	250	265	3203	5096	6406	7375	8567	9486	10402	12391	11794
	250	255	270	3388	5389	6775	7800	9061	10032	11001	13105	12478
	255	**260**	275	3577	5691	7155	8237	9568	10594	11617	13839	13181
	260	265	**280**	3772	6001	7545	8686	10090	11172	12250	14593	13903
	265	270	285	3972	6320	7945	9147	10625	11764	12900	15367	14644
	270	275	290	4178	6646	8355	9619	11174	12372	13566	16161	15405
	275	**280**	295	4388	6981	8776	10104	11737	12995	14250	16975	16185
	280	285	**300**	4604	7324	9207	10600	12313	13634	14950	17809	16984
	285	290		4824	7675	9649	11109	12904	14288	15667	18663	17802
	290	295		5050	8035	10101	11629	13508	14957	16401	19537	18640
	295	**300**		5281	8402	10563	12161	14126	15641	17151	20431	19497
	300			5518	8778	11035	12705	14758	16341	17918	21345	20373

On-site reinforcement Egcobox® type MM-HVS - C25/30

for balconies with offset of height

Egcobox type HVS			MM10-K	MM20	MM25	MM30	MM35	MM45	MM50	MM55	MM60
length of element [mm]			**500**	**1000**	**1000**	**1000**	**1000**	**1000**	**1000**	**1000**	**1000**
reqired minimum width of joist b_w [mm]			175	175	175	175	175	175	175	175	175
Egcobox ø rebar [mm]			ø 8	ø 8	ø 8	ø 8	ø 8	ø 8	ø 8	ø 8	ø 10
Egcobox l_0 rebar [mm]			475	475	475	475	475	475	475	475	612
item ① - lapping reinforcement / element											
≥ as [cm²] B500			2,79	4,22	5,59	6,28	7,04	7,74	8,44	9,85	10,08
suggested on-site reinforcement [mm]			ø 10	ø 10	ø 10	ø 10	ø 10	ø 10	ø 10	ø 10	ø 12
item ② - balcony-side suspension reinforcement shear force / element											
shear force level	VS / VS±	≥ a_s [cm²] B500	-	1,12	1,12	1,12	1,12	1,12	1,12	1,12	1,12
shear force level	V1 / V1±	≥ a_s [cm²] B500	-	1,99	1,99	1,99	1,99	1,99	1,99	1,99	1,99
shear force level	V2 / V2±	≥ a_s [cm²] B500	-	2,99	2,99	2,99	2,99	2,99	2,99	2,99	2,99
shear force level	V3 / V3±	≥ a_s [cm²] B500	-	3,98	3,98	3,98	3,98	3,98	3,98	3,98	3,98
shear force level	V4 / V4±	≥ a_s [cm²] B500	-	5,59	5,59	6,22	6,22	6,22	6,22	6,22	6,22
shear force level	V6±	≥ a_s [cm²] B500	0,56	1,12	1,12	1,12	1,12	1,12	1,12	1,12	1,12
shear force level	V7±	≥ a_s [cm²] B500	1,12	2,24	2,24	2,24	2,24	2,24	2,24	2,99	2,99
shear force level	V8±	≥ a_s [cm²] B500	2,33	4,66	4,66	4,66	4,66	4,66	4,66	4,66	4,66

MM-HVS: minimum width of joist b_w 175 mm (concrete cover 30 mm)

item ⑤ - link reinforcement slabsides / element at direct support (all shear force level - a_s lapping reinforcement)											
offset balcony	**a≤ 90 mm**	≥ a_s [cm²] B500	1,65	2,50	3,30	3,74	4,19	4,61	5,06	5,91	6,04
offset balcony	**a= 150 mm**	≥ a_s [cm²] B500	2,97	4,49	5,94	6,73	7,54	8,29	9,11	10,63	10,88
offset balcony	**a= 260 mm**	≥ a_s [cm²] B500	5,39	8,15	10,79	12,22	13,68	15,05	16,54	19,29	19,74
item ⑥ - link reinforcement / element at indirect support (a_s lapping reinforcement + a_s transverse shear force)											
shear force level VS / VS±	**a≤ 90 mm**	≥ a_s [cm²] B500	1,65+0,56	2,50+1,12	3,30+1,12	3,74+1,12	4,19+1,12	4,61+1,12	5,06+1,12	5,91+1,12	6,04+1,12
	a= 150 mm		2,97+0,56	4,49+1,12	5,94+1,12	6,73+1,12	7,54+1,12	8,29+1,12	9,11+1,12	10,63+1,12	10,88+1,12
	a= 260 mm		5,39+0,56	8,15+1,12	10,79+1,12	12,22+1,12	13,68+1,12	15,05+1,12	16,54+1,12	19,29+1,12	19,74+1,12
shear force level V1 / V1±	**a≤ 90 mm**	≥ a_s [cm²] B500	1,65+1,00	2,50+1,99	3,30+1,99	3,74+1,99	4,19+1,99	4,61+1,99	5,06+1,99	5,91+1,99	6,04+1,99
	a= 150 mm		2,97+1,00	4,49+1,99	5,94+1,99	6,73+1,99	7,54+1,99	8,29+1,99	9,11+1,99	10,63+1,99	10,88+1,99
	a= 260 mm		5,39+1,00	8,15+1,99	10,79+1,99	12,22+1,99	13,68+1,99	15,05+1,99	16,54+1,99	19,29+1,99	19,74+1,99
shear force level V2 / V2±	**a≤ 90 mm**	≥ a_s [cm²] B500	1,65+1,49	2,50+2,99	3,30+2,99	3,74+2,99	4,19+2,99	4,61+2,99	5,06+2,99	5,91+2,99	6,04+2,99
	a= 150 mm		2,97+1,49	4,49+2,99	5,94+2,99	6,73+2,99	7,54+2,99	8,29+2,99	9,11+2,99	10,63+2,99	10,88+2,99
	a= 260 mm		5,39+1,49	8,15+2,99	10,79+2,99	12,22+2,99	13,68+2,99	15,05+2,99	16,54+2,99	19,29+2,99	19,74+2,99
shear force level V3 / V3±	**a≤ 90 mm**	≥ a_s [cm²] B500	1,65+1,99	2,50+3,98	3,30+3,98	3,74+3,98	4,19+3,98	4,61+3,98	5,06+3,98	5,91+3,98	6,04+3,98
	a= 150 mm		2,97+1,99	4,49+3,98	5,94+3,98	6,73+3,98	7,54+3,98	8,29+3,98	9,11+3,98	10,63+3,98	10,88+3,98
	a= 260 mm		5,39+1,99	8,15+3,98	10,79+3,98	12,22+3,98	13,68+3,98	15,05+3,98	16,54+3,98	19,29+3,98	19,74+3,98
shear force level V4 / V4±	**a≤ 90 mm**	≥ a_s [cm²] B500	-	2,50+5,59	3,30+5,59	3,74+6,22	4,19+6,22	4,61+6,22	5,06+6,22	5,91+6,22	6,04+6,22
	a= 150 mm		-	4,49+5,59	5,94+5,59	6,73+6,22	7,54+6,22	8,29+6,22	9,11+6,22	10,63+6,22	10,88+6,22
	a= 260 mm		-	8,15+5,59	10,79+5,59	12,22+6,22	13,68+6,22	15,05+6,22	16,54+6,22	19,29+6,22	19,74+6,22
shear force level V6±	**a≤ 90 mm**	≥ a_s [cm²] B500	1,65+0,56	2,50+1,12	3,30+1,12	3,74+1,12	4,19+1,12	4,61+1,12	5,06+1,12	5,91+1,12	6,04+1,12
	a= 150 mm		2,97+0,56	4,49+1,12	5,94+1,12	6,73+1,12	7,54+1,12	8,29+1,12	9,11+1,12	10,63+1,12	10,88+1,12
	a= 260 mm		5,39+0,56	8,15+1,12	10,79+1,12	12,22+1,12	13,68+1,12	15,05+1,12	16,54+1,12	19,29+1,12	19,74+1,12
shear force level V7±	**a≤ 90 mm**	≥ a_s [cm²] B500	1,65+1,12	2,50+2,24	3,30+2,24	3,74+2,24	4,19+2,24	4,61+2,24	5,06+2,24	5,91+2,99	6,04+2,99
	a= 150 mm		2,97+1,12	4,49+2,24	5,94+2,24	6,73+2,24	7,54+2,24	8,29+2,24	9,11+2,24	10,63+2,99	10,88+2,99
	a= 260 mm		5,39+1,12	8,15+2,24	10,79+2,24	12,22+2,24	13,68+2,24	15,05+2,24	16,54+2,24	19,29+2,99	19,74+2,99
shear force level V8±	**a≤ 90 mm**	≥ a_s [cm²] B500	1,65+2,33	2,50+4,66	3,30+4,66	3,74+4,66	4,19+4,66	4,61+4,66	5,06+4,66	5,91+4,66	6,04+4,66
	a= 150 mm		2,97+2,33	4,49+4,66	5,94+4,66	6,73+4,66	7,54+4,66	8,29+4,66	9,11+4,66	10,63+4,66	10,88+4,66
	a= 260 mm		5,39+2,33	8,15+4,66	10,79+4,66	12,22+4,66	13,68+4,66	15,05+4,66	16,54+4,66	19,29+4,66	19,74+4,66

Egcobox type HVS			MM10-K	MM20	MM25	MM30	MM35	MM45	MM50	MM55	MM60
length of element [mm]			500	1000	1000	1000	1000	1000	1000	1000	1000

MM-HVS: minimum width of joist b_w 200 mm (concrete cover 30 mm)

item ⑤ - link reinforcement slabsides / element at direct support (all shear force level - a_s lapping reinforcement)											
offset balcony	**a≤ 90 mm**	≥ a_s [cm²] B500	1,40	2,12	2,80	3,17	3,55	3,91	4,29	5,01	5,12
offset balcony	**a= 150 mm**	≥ a_s [cm²] B500	2,52	3,82	5,05	5,71	6,40	7,04	7,72	9,01	9,22
offset balcony	**a= 260 mm**	≥ a_s [cm²] B500	4,58	6,92	9,16	10,37	11,61	12,77	14,02	16,35	16,73
item ⑥ - link reinforcement / element at indirect support (a_s lapping reinforcement + a_s transverse shear force)											
shear force level VS / VS±	**a≤ 90 mm**		1,40+0,56	2,12+1,12	2,80+1,12	3,17+1,12	3,55+1,12	3,91+1,12	4,29+1,12	5,01+1,12	5,12+1,12
	a= 150 mm	≥ a_s [cm²] B500	2,52+0,56	3,82+1,12	5,05+1,12	5,71+1,12	6,40+1,12	7,04+1,12	7,72+1,12	9,01+1,12	9,22+1,12
	a= 260 mm		4,58+0,56	6,92+1,12	9,16+1,12	10,37+1,12	11,61+1,12	12,77+1,12	14,02+1,12	16,35+1,12	16,73+1,12
shear force level V1 / V1±	**a≤ 90 mm**		1,40+1,00	2,12+1,99	2,80+1,99	3,17+1,99	3,55+1,99	3,91+1,99	4,29+1,99	5,01+1,99	5,12+1,99
	a= 150 mm	≥ a_s [cm²] B500	2,52+1,00	3,82+1,99	5,05+1,99	5,71+1,99	6,40+1,99	7,04+1,99	7,72+1,99	9,01+1,99	9,22+1,99
	a= 260 mm		4,58+1,00	6,92+1,99	9,16+1,99	10,37+1,99	11,61+1,99	12,77+1,99	14,02+1,99	16,35+1,99	16,73+1,99
shear force level V2 / V2±	**a≤ 90 mm**		1,40+1,49	2,12+2,99	2,80+2,99	3,17+2,99	3,55+2,99	3,91+2,99	4,29+2,99	5,01+2,99	5,12+2,99
	a= 150 mm	≥ a_s [cm²] B500	2,52+1,49	3,82+2,99	5,05+2,99	5,71+2,99	6,40+2,99	7,04+2,99	7,72+2,99	9,01+2,99	9,22+2,99
	a= 260 mm		4,58+1,49	6,92+2,99	9,16+2,99	10,37+2,99	11,61+2,99	12,77+2,99	14,02+2,99	16,35+2,99	16,73+2,99
shear force level V3 / V3±	**a≤ 90 mm**		1,40+1,99	2,12+3,98	2,80+3,98	3,17+3,98	3,55+3,98	3,91+3,98	4,29+3,98	5,01+3,98	5,12+3,98
	a= 150 mm	≥ a_s [cm²] B500	2,52+1,99	3,82+3,98	5,05+3,98	5,71+3,98	6,40+3,98	7,04+3,98	7,72+3,98	9,01+3,98	9,22+3,98
	a= 260 mm		4,58+1,99	6,92+3,98	9,16+3,98	10,37+3,98	11,61+3,98	12,77+3,98	14,02+3,98	16,35+3,98	16,73+3,98
shear force level V4 / V4±	**a≤ 90 mm**		-	2,12+5,59	2,80+5,59	3,17+6,22	3,55+6,22	3,91+6,22	4,29+6,22	5,01+6,22	5,12+6,22
	a= 150 mm	≥ a_s [cm²] B500	-	3,82+5,59	5,05+5,59	5,71+6,22	6,40+6,22	7,04+6,22	7,72+6,22	9,01+6,22	9,22+6,22
	a= 260 mm		-	6,92+5,59	9,16+5,59	10,37+6,22	11,61+6,22	12,77+6,22	14,02+6,22	16,35+6,22	16,73+6,22
shear force level V6±	**a≤ 90 mm**		1,40+0,56	2,12+1,12	2,80+1,12	3,17+1,12	3,55+1,12	3,91+1,12	4,29+1,12	5,01+1,12	5,12+1,12
	a= 150 mm	≥ a_s [cm²] B500	2,52+0,56	3,82+1,12	5,05+1,12	5,71+1,12	6,40+1,12	7,04+1,12	7,72+1,12	9,01+1,12	9,22+1,12
	a= 260 mm		4,58+0,56	6,92+1,12	9,16+1,12	10,37+1,12	11,61+1,12	12,77+1,12	14,02+1,12	16,35+1,12	16,73+1,12
shear force level V7±	**a≤ 90 mm**		1,40+1,12	2,12+2,24	2,80+2,24	3,17+2,24	3,55+2,24	3,91+2,24	4,29+2,24	5,01+2,99	5,12+2,99
	a= 150 mm	≥ a_s [cm²] B500	2,52+1,12	3,82+2,24	5,05+2,24	5,71+2,24	6,40+2,24	7,04+2,24	7,72+2,24	9,01+2,99	9,22+2,99
	a= 260 mm		4,58+1,12	6,92+2,24	9,16+2,24	10,37+2,24	11,61+2,24	12,77+2,24	14,02+2,24	16,35+2,99	16,73+2,99
shear force level V8±	**a≤ 90 mm**		1,40+2,33	2,12+4,66	2,80+4,66	3,17+4,66	3,55+4,66	3,91+4,66	4,29+4,66	5,01+4,66	5,12+4,66
	a= 150 mm	≥ a_s [cm²] B500	2,52+2,33	3,82+4,66	5,05+4,66	5,71+4,66	6,40+4,66	7,04+4,66	7,72+4,66	9,01+4,66	9,22+4,66
	a= 260 mm		4,58+2,33	6,92+4,66	9,16+4,66	10,37+4,66	11,61+4,66	12,77+4,66	14,02+4,66	16,35+4,66	16,73+4,66

MM-HVS: minimum width of joist b_w 220 mm (concrete cover 30 mm)

item ⑤ - link reinforcement slabsides / element at direct support (all shear force level - a_s lapping reinforcement)											
offset balcony	**a≤ 90 mm**	≥ a_s [cm²] B500	1,25	1,89	2,50	2,83	3,17	3,49	3,82	4,46	4,56
offset balcony	**a= 150 mm**	≥ a_s [cm²] B500	2,25	3,41	4,51	5,10	5,71	6,28	6,88	8,03	8,22
offset balcony	**a= 260 mm**	≥ a_s [cm²] B500	4,09	6,18	8,18	9,25	10,35	11,39	12,49	14,58	14,91
item ⑥ - link reinforcement / element at indirect support (a_s lapping reinforcement + a_s transverse shear force)											
shear force level VS / VS±	**a≤ 90 mm**		1,25+0,56	1,89+1,12	2,50+1,12	2,83+1,12	3,17+1,12	3,49+1,12	3,82+1,12	4,46+1,12	4,56+1,12
	a= 150 mm	≥ a_s [cm²] B500	2,25+0,56	3,41+1,12	4,51+1,12	5,10+1,12	5,71+1,12	6,28+1,12	6,88+1,12	8,03+1,12	8,22+1,12
	a= 260 mm		4,09+0,56	6,18+1,12	8,18+1,12	9,25+1,12	10,35+1,12	11,39+1,12	12,49+1,12	14,58+1,12	14,91+1,12
shear force level V1 / V1±	**a≤ 90 mm**		1,25+1,00	1,89+1,99	2,50+1,99	2,83+1,99	3,17+1,99	3,49+1,99	3,82+1,99	4,46+1,99	4,56+1,99
	a= 150 mm	≥ a_s [cm²] B500	2,25+1,00	3,41+1,99	4,51+1,99	5,10+1,99	5,71+1,99	6,28+1,99	6,88+1,99	8,03+1,99	8,22+1,99
	a= 260 mm		4,09+1,00	6,18+1,99	8,18+1,99	9,25+1,99	10,35+1,99	11,39+1,99	12,49+1,99	14,58+1,99	14,91+1,99
shear force level V2 / V2±	**a≤ 90 mm**		1,25+1,49	1,89+2,99	2,50+2,99	2,83+2,99	3,17+2,99	3,49+2,99	3,82+2,99	4,46+2,99	4,56+2,99
	a= 150 mm	≥ a_s [cm²] B500	2,25+1,49	3,41+2,99	4,51+2,99	5,10+2,99	5,71+2,99	6,28+2,99	6,88+2,99	8,03+2,99	8,22+2,99
	a= 260 mm		4,09+1,49	6,18+2,99	8,18+2,99	9,25+2,99	10,35+2,99	11,39+2,99	12,49+2,99	14,58+2,99	14,91+2,99
shear force level V3 / V3±	**a≤ 90 mm**		1,25+1,99	1,89+3,98	2,50+3,98	2,83+3,98	3,17+3,98	3,49+3,98	3,82+3,98	4,46+3,98	4,56+3,98
	a= 150 mm	≥ a_s [cm²] B500	2,25+1,99	3,41+3,98	4,51+3,98	5,10+3,98	5,71+3,98	6,28+3,98	6,88+3,98	8,03+3,98	8,22+3,98
	a= 260 mm		4,09+1,99	6,18+3,98	8,18+3,98	9,25+3,98	10,35+3,98	11,39+3,98	12,49+3,98	14,58+3,98	14,91+3,98
shear force level V4 / V4±	**a≤ 90 mm**		-	1,89+5,59	2,50+5,59	2,83+6,22	3,17+6,22	3,49+6,22	3,82+6,22	4,46+6,22	4,56+6,22
	a= 150 mm	≥ a_s [cm²] B500	-	3,41+5,59	4,51+5,59	5,10+6,22	5,71+6,22	6,28+6,22	6,88+6,22	8,03+6,22	8,22+6,22
	a= 260 mm		-	6,18+5,59	8,18+5,59	9,25+6,22	10,35+6,22	11,39+6,22	12,49+6,22	14,58+6,22	14,91+6,22
shear force level V6±	**a≤ 90 mm**		1,25+0,56	1,89+1,12	2,50+1,12	2,83+1,12	3,17+1,12	3,49+1,12	3,82+1,12	4,46+1,12	4,56+1,12
	a= 150 mm	≥ a_s [cm²] B500	2,25+0,56	3,41+1,12	4,51+1,12	5,10+1,12	5,71+1,12	6,28+1,12	6,88+1,12	8,03+1,12	8,22+1,12
	a= 260 mm		4,09+0,56	6,18+1,12	8,18+1,12	9,25+1,12	10,35+1,12	11,39+1,12	12,49+1,12	14,58+1,12	14,91+1,12
shear force level V7±	**a≤ 90 mm**		1,25+1,12	1,89+2,24	2,50+2,24	2,83+2,24	3,17+2,24	3,49+2,24	3,82+2,24	4,46+2,99	4,56+2,99
	a= 150 mm	≥ a_s [cm²] B500	2,25+1,12	3,41+2,24	4,51+2,24	5,10+2,24	5,71+2,24	6,28+2,24	6,88+2,24	8,03+2,99	8,22+2,99
	a= 260 mm		4,09+1,12	6,18+2,24	8,18+2,24	9,25+2,24	10,35+2,24	11,39+2,24	12,49+2,24	14,58+2,99	14,91+2,99
shear force level V8±	**a≤ 90 mm**		1,25+2,33	1,89+4,66	2,50+4,66	2,83+4,66	3,17+4,66	3,49+4,66	3,82+4,66	4,46+4,66	4,56+4,66
	a= 150 mm	≥ a_s [cm²] B500	2,25+2,33	3,41+4,66	4,51+4,66	5,10+4,66	5,71+4,66	6,28+4,66	6,88+4,66	8,03+4,66	8,22+4,66
	a= 260 mm		4,09+2,33	6,18+4,66	8,18+4,66	9,25+4,66	10,35+4,66	11,39+4,66	12,49+4,66	14,58+4,66	14,91+4,66

Egcobox type HVS			MM10-K	MM20	MM25	MM30	MM35	MM45	MM50	MM55	MM60
length of element [mm]			500	1000	1000	1000	1000	1000	1000	1000	1000

MM-HVS: minimum width of joist b_w 250 mm (concrete cover 30 mm)

item ⑤ - link reinforcement slabsides / element at direct support (all shear force level - a_s lapping reinforcement)											
offset balcony	**a≤ 90 mm**	≥ a_s [cm²] B500	1,08	1,63	2,16	2,44	2,73	3,00	3,29	3,84	3,92
offset balcony	**a= 150 mm**	≥ a_s [cm²] B500	1,94	2,93	3,88	4,38	4,91	5,40	5,92	6,91	7,06
offset balcony	**a= 260 mm**	≥ a_s [cm²] B500	3,52	5,32	7,04	7,96	8,91	9,80	10,74	12,53	12,82
item ⑥ - link reinforcement / element at indirect support (a_s lapping reinforcement + a_s transverse shear force)											
shear force level VS / VS±	**a≤ 90 mm**	≥ a_s [cm²] B500	1,12+0,56	1,63+1,12	2,16+1,12	2,44+1,12	2,73+1,12	3,00+1,12	3,29+1,12	3,84+1,12	3,92+1,12
	a= 150 mm		1,94+0,56	2,93+1,12	3,88+1,12	4,38+1,12	4,91+1,12	5,40+1,12	5,92+1,12	6,91+1,12	7,06+1,12
	a= 260 mm		3,52+0,56	5,32+1,12	7,04+1,12	7,96+1,12	8,91+1,12	9,80+1,12	10,74+1,12	12,53+1,12	12,82+1,12
shear force level V1 / V1±	**a≤ 90 mm**	≥ a_s [cm²] B500	1,12+1,00	1,63+1,99	2,16+1,99	2,44+1,99	2,73+1,99	3,00+1,99	3,29+1,99	3,84+1,99	3,92+1,99
	a= 150 mm		1,94+1,00	2,93+1,99	3,88+1,99	4,38+1,99	4,91+1,99	5,40+1,99	5,92+1,99	6,91+1,99	7,06+1,99
	a= 260 mm		3,52+1,00	5,32+1,99	7,04+1,99	7,96+1,99	8,91+1,99	9,80+1,99	10,74+1,99	12,53+1,99	12,82+1,99
shear force level V2 / V2±	**a≤ 90 mm**	≥ a_s [cm²] B500	1,12+1,49	1,63+2,99	2,16+2,99	2,44+2,99	2,73+2,99	3,00+2,99	3,29+2,99	3,84+2,99	3,92+2,99
	a= 150 mm		1,94+1,49	2,93+2,99	3,88+2,99	4,38+2,99	4,91+2,99	5,40+2,99	5,92+2,99	6,91+2,99	7,06+2,99
	a= 260 mm		3,52+1,49	5,32+2,99	7,04+2,99	7,96+2,99	8,91+2,99	9,80+2,99	10,74+2,99	12,53+2,99	12,82+2,99
shear force level V3 / V3±	**a≤ 90 mm**	≥ a_s [cm²] B500	1,12+1,99	1,63+3,98	2,16+3,98	2,44+3,98	2,73+3,98	3,00+3,98	3,29+3,98	3,84+3,98	3,92+3,98
	a= 150 mm		1,94+1,99	2,93+3,98	3,88+3,98	4,38+3,98	4,91+3,98	5,40+3,98	5,92+3,98	6,91+3,98	7,06+3,98
	a= 260 mm		3,52+1,99	5,32+3,98	7,04+3,98	7,96+3,98	8,91+3,98	9,80+3,98	10,74+3,98	12,53+3,98	12,82+3,98
shear force level V4 / V4±	**a≤ 90 mm**	≥ a_s [cm²] B500	-	1,63+5,59	2,16+5,59	2,44+6,22	2,73+6,22	3,00+6,22	3,29+6,22	3,84+6,22	3,92+6,22
	a= 150 mm		-	2,93+5,59	3,88+5,59	4,38+6,22	4,91+6,22	5,40+6,22	5,92+6,22	6,91+6,22	7,06+6,22
	a= 260 mm		-	5,32+5,59	7,04+5,59	7,96+6,22	8,91+6,22	9,80+6,22	10,74+6,22	12,53+6,22	12,82+6,22
shear force level V6±	**a≤ 90 mm**	≥ a_s [cm²] B500	1,12+0,56	1,63+1,12	2,16+1,12	2,44+1,12	2,73+1,12	3,00+1,12	3,29+1,12	3,84+1,12	3,92+1,12
	a= 150 mm		1,94+0,56	2,93+1,12	3,88+1,12	4,38+1,12	4,91+1,12	5,40+1,12	5,92+1,12	6,91+1,12	7,06+1,12
	a= 260 mm		3,52+0,56	5,32+1,12	7,04+1,12	7,96+1,12	8,91+1,12	9,80+1,12	10,74+1,12	12,53+1,12	12,82+1,12
shear force level V7±	**a≤ 90 mm**	≥ a_s [cm²] B500	1,12+1,12	1,63+2,24	2,16+2,24	2,44+2,24	2,73+2,24	3,00+2,24	3,29+2,24	3,84+2,99	3,92+2,99
	a= 150 mm		1,94+1,12	2,93+2,24	3,88+2,24	4,38+2,24	4,91+2,24	5,40+2,24	5,92+2,24	6,91+2,99	7,06+2,99
	a= 260 mm		3,52+1,12	5,32+2,24	7,04+2,24	7,96+2,24	8,91+2,24	9,80+2,24	10,74+2,24	12,53+2,99	12,82+2,99
shear force level V8±	**a≤ 90 mm**	≥ a_s [cm²] B500	1,12+2,33	1,63+4,66	2,16+4,66	2,44+4,66	2,73+4,66	3,00+4,66	3,29+4,66	3,84+4,66	3,92+4,66
	a= 150 mm		1,94+2,33	2,93+4,66	3,88+4,66	4,38+4,66	4,91+4,66	5,40+4,66	5,92+4,66	6,91+4,66	7,06+4,66
	a= 260 mm		3,52+2,33	5,32+4,66	7,04+4,66	7,96+4,66	8,91+4,66	9,80+4,66	10,74+4,66	12,53+4,66	12,82+4,66

item ③+④ - structural reinforcement
In the slab edge of the u-bar reinforcement is respectively to arrange ≥ ø8 (item ③).
On the balcony side, it is recommended to design the edge reinforcement for the shear force V_{Ed} / f_{yd} ≥ ø6/250 mm according to EN 1992 (item ④ - vs. item ②).

The dimension of the balcony offset HV [mm] must be specified in the element name, e.g. MM20-HVS120-C35-h200.

The suggested lapping reinforcement (α_6=1,5) is selected (item ①) to transfer 100% of the M_{Rd} of the Egcobox℠ (height Egcobox℠ = height floor). An other reinforcement selection is possible.
In case of an other reinforcement selection shall be approved the lapping reinforcement in accordance with EN 1992. The reinforcement cross section or the lapping length can be derated in reference of utilization proportional M_{Ed} / M_{Rd}. The lapping reinforcement must be approved by the structural engineer.

The proposed steel cross-section a_s (item ②) covers the maximum design transverse force V_{Rd} of the Egcobox℠. In case of smaller actions, the edge reinforcement may be determined with V_{Ed} / f_{yd} ≥ ø6/250 mm.

Item ⑤ or item ⑥ applies to the specified required minimum widths of the joist (b_w) and the height of the offset (a= 50 mm; a=100 mm; a= 200 mm). For larger joist widths, a reduction of the required reinforcement is possible.
In between, interpolation is possible; recommended minimum reinforcement ø6/250 mm.
When selecting the reinforcement, the reinforcement rules and the lap lengths must be taken into account. Ø6/250 mm is recommended as the minimum reinforcement.
For low offset heights ≤90 mm (connection height Egcobox from 160 mm) to 230 mm (connection height 300 mm), the use of Egcobox® standard elements without height offset is recommended as an alternative.

Item ⑧ must be verified and planned by the structural engineer (corresponds to item ① for slab thickness = balcony slab thickness;
for slab thickness ≠ balcony slab thickness, an allowance is required or reduction is possible). The load transmission into the slab must be verified by the structural engineer.

The specifications apply to good bonding conditions.

The specified connection reinforcement is required exclusively for the static transfer of the cutting forces from the cantilever slab connection.
The statically required beam-reinforcement is not taken into account and shown. This must be additionally dimensioned by the structural engineer.
The specified connection reinforcement is only a suggestion. The structural engineer in charge must check the feasibility of the design.
The distribution of the Egcobox® reinforcement and the required minimum beam widths must be observed.
In the case of alternating shear forces, the embedment length of the shear force bar must be taken into account when selecting the beam width.

design proposal
direct support

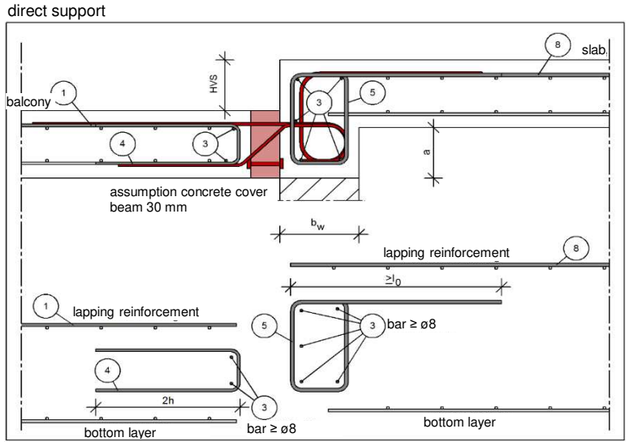

indirect support

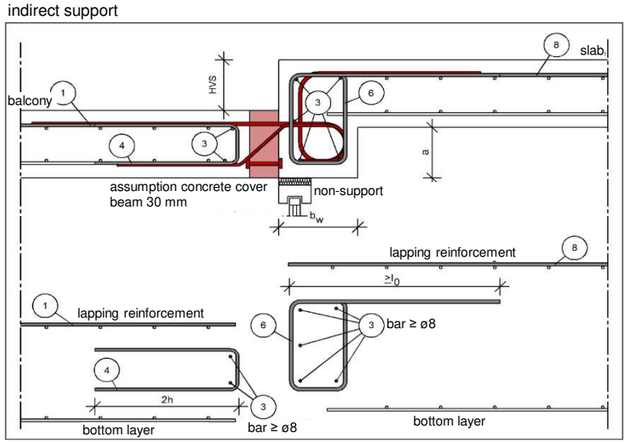

On-site reinforcement Egcobox® type MM-WOS - C25/30

for balconies with overlap in wall upwards

Egcobox type WOS			MM10-K	MM20	MM25	MM30	MM35	MM45	MM50	MM55	MM60
length of element [mm]			**500**	**1000**	**1000**	**1000**	**1000**	**1000**	**1000**	**1000**	**1000**
reqired minimum width of joist b_w [mm]			175	175	175	175	175	175	175	175	175
Egcobox ø rebar [mm]			ø 8	ø 8	ø 8	ø 8	ø 8	ø 8	ø 8	ø 8	ø 10
Egcobox l_0 rebar [mm]			475	475	475	475	475	475	475	475	612
item ① - lapping reinforcement / element											
≥ as [cm²] B500			2,79	4,22	5,59	6,28	7,04	7,74	8,44	9,85	10,08
suggested on-site reinforcement [mm]			ø 10	ø 10	ø 10	ø 10	ø 10	ø 10	ø 10	ø 10	ø 12
item ② - balcony-side suspension reinforcement shear force / element											
shear force level	VS / VS±	≥ a_s [cm²] B500	-	1,12	1,12	1,12	1,12	1,12	1,12	1,12	1,12
shear force level	V1 / V1±	≥ a_s [cm²] B500	-	1,99	1,99	1,99	1,99	1,99	1,99	1,99	1,99
shear force level	V2 / V2±	≥ a_s [cm²] B500	-	2,99	2,99	2,99	2,99	2,99	2,99	2,99	2,99
shear force level	V3 / V3±	≥ a_s [cm²] B500	-	3,98	3,98	3,98	3,98	3,98	3,98	3,98	3,98
shear force level	V4 / V4±	≥ a_s [cm²] B500	-	5,59	5,59	6,22	6,22	6,22	6,22	6,22	6,22
shear force level	V6±	≥ a_s [cm²] B500	0,56	1,12	1,12	1,12	1,12	1,12	1,12	1,12	1,12
shear force level	V7±	≥ a_s [cm²] B500	1,12	2,24	2,24	2,24	2,24	2,24	2,24	2,99	2,99
shear force level	V8±	≥ a_s [cm²] B500	2,33	4,66	4,66	4,66	4,66	4,66	4,66	4,66	4,66

MM-WOS: minimum width of joist b_w 175 mm (concrete cover 30 mm)

item ⑤ - link reinforcement in wall / element at <u>direct support</u> (all shear force level - a_s lapping reinforcement)											
connection	**h= 160 mm**	≥ a_s [cm²] B500	1,98	2,99	3,96	4,49	5,03	5,53	6,08	7,09	7,25
height	**h= 250 mm**	≥ a_s [cm²] B500	3,96	5,99	7,92	8,98	10,05	11,06	12,15	14,18	14,50
item ⑥ - link reinforcement / element at <u>indirect support</u> (a_s lapping reinforcement + a_s transverse shear force)											
shear force level VS	**h= 160 mm**	≥ a_s [cm²] B500	1,98+0,56	2,99+1,12	3,96+1,12	4,49+1,12	5,03+1,12	5,53+1,12	6,08+1,12	7,09+1,12	7,25+1,12
/ VS±	**h= 250 mm**		3,96+0,56	5,99+1,12	7,92+1,12	8,98+1,12	10,05+1,12	11,06+1,12	12,15+1,12	14,18+1,12	14,50+1,12
shear force level V1	**h= 160 mm**	≥ a_s [cm²] B500	1,98+1,00	2,99+1,99	3,96+1,99	4,49+1,99	5,03+1,99	5,53+1,99	6,08+1,99	7,09+1,99	7,25+1,99
/ V1±	**h= 250 mm**		3,96+1,00	5,99+1,99	7,92+1,99	8,98+1,99	10,05+1,99	11,06+1,99	12,15+1,99	14,18+1,99	14,50+1,99
shear force level V2	**h= 160 mm**	≥ a_s [cm²] B500	1,98+1,49	2,99+2,99	3,96+2,99	4,49+2,99	5,03+2,99	5,53+2,99	6,08+2,99	7,09+2,99	7,25+2,99
/ V2±	**h= 250 mm**		3,96+1,49	5,99+2,99	7,92+2,99	8,98+2,99	10,05+2,99	11,06+2,99	12,15+2,99	14,18+2,99	14,50+2,99
shear force level V3	**h= 160 mm**	≥ a_s [cm²] B500	1,98+1,99	2,99+3,98	3,96+3,98	4,49+3,98	5,03+3,98	5,53+3,98	6,08+3,98	7,09+3,98	7,25+3,98
/ V3±	**h= 250 mm**		3,96+1,99	5,99+3,98	7,92+3,98	8,98+3,98	10,05+3,98	11,06+3,98	12,15+3,98	14,18+3,98	14,50+3,98
shear force level V4	**h= 160 mm**	≥ a_s [cm²] B500	-	2,99+5,59	3,96+5,59	4,49+6,22	5,03+6,22	5,53+6,22	6,08+6,22	7,09+6,22	7,25+6,22
/ V4±	**h= 250 mm**		-	5,99+5,59	7,92+5,59	8,98+6,22	10,05+6,22	11,06+6,22	12,15+6,22	14,18+6,22	14,50+6,22
shear force level	**h= 160 mm**	≥ a_s [cm²] B500	1,98+0,56	2,99+1,12	3,96+1,12	4,49+1,12	5,03+1,12	5,53+1,12	6,08+1,12	7,09+1,12	7,25+1,12
V6±	**h= 250 mm**		3,96+0,56	5,99+1,12	7,92+1,12	8,98+1,12	10,05+1,12	11,06+1,12	12,15+1,12	14,18+1,12	14,50+1,12
shear force level	**h= 160 mm**	≥ a_s [cm²] B500	1,98+1,12	2,99+2,24	3,96+2,24	4,49+2,24	5,03+2,24	5,53+2,24	6,08+2,24	7,09+2,99	7,25+2,99
V7±	**h= 250 mm**		3,96+1,12	5,99+2,24	7,92+2,24	8,98+2,24	10,05+2,24	11,06+2,24	12,15+2,24	14,18+2,99	14,50+2,99
shear force level	**h= 160 mm**	≥ a_s [cm²] B500	1,98+2,33	2,99+4,66	3,96+4,66	4,49+4,66	5,03+4,66	5,53+4,66	6,08+4,66	7,09+4,66	7,25+4,66
V8±	**h= 250 mm**		3,96+2,33	5,99+4,66	7,92+4,66	8,98+4,66	10,05+4,66	11,06+4,66	12,15+4,66	14,18+4,66	14,50+4,66

MM-WOS: minimum width of joist b_w 200 mm (concrete cover 30 mm)

item ⑤ - link reinforcement in wall / element at <u>direct support</u> (all shear force level - a_s lapping reinforcement)											
connection	**h= 160 mm**	≥ a_s [cm²] B500	1,68	2,54	3,37	3,81	4,26	4,69	5,15	6,01	6,15
height	**h= 250 mm**	≥ a_s [cm²] B500	3,37	5,09	6,73	7,62	8,53	9,38	10,30	12,01	12,29
item ⑥ - link reinforcement / element at <u>indirect support</u> (a_s lapping reinforcement + a_s transverse shear force)											
shear force level VS	**h= 160 mm**	≥ a_s [cm²] B500	1,68+0,56	2,54+1,12	3,37+1,12	3,81+1,12	4,26+1,12	4,69+1,12	5,15+1,12	6,01+1,12	6,15+1,12
/ VS±	**h= 250 mm**		3,37+0,56	5,09+1,12	6,73+1,12	7,62+1,12	8,53+1,12	9,38+1,12	10,30+1,12	12,01+1,12	12,29+1,12
shear force level V1	**h= 160 mm**	≥ a_s [cm²] B500	1,68+1,00	2,54+1,99	3,37+1,99	3,81+1,99	4,26+1,99	4,69+1,99	5,15+1,99	6,01+1,99	6,15+1,99
/ V1±	**h= 250 mm**		3,37+1,00	5,09+1,99	6,73+1,99	7,62+1,99	8,53+1,99	9,38+1,99	10,30+1,99	12,01+1,99	12,29+1,99
shear force level V2	**h= 160 mm**	≥ a_s [cm²] B500	1,68+1,49	2,54+2,99	3,37+2,99	3,81+2,99	4,26+2,99	4,69+2,99	5,15+2,99	6,01+2,99	6,15+2,99
/ V2±	**h= 250 mm**		3,37+1,49	5,09+2,99	6,73+2,99	7,62+2,99	8,53+2,99	9,38+2,99	10,30+2,99	12,01+2,99	12,29+2,99
shear force level V3	**h= 160 mm**	≥ a_s [cm²] B500	1,68+1,99	2,54+3,98	3,37+3,98	3,81+3,98	4,26+3,98	4,69+3,98	5,15+3,98	6,01+3,98	6,15+3,98
/ V3±	**h= 250 mm**		3,37+1,99	5,09+3,98	6,73+3,98	7,62+3,98	8,53+3,98	9,38+3,98	10,30+3,98	12,01+3,98	12,29+3,98
shear force level V4	**h= 160 mm**	≥ a_s [cm²] B500	-	2,54+5,59	3,37+5,59	3,81+6,22	4,26+6,22	4,69+6,22	5,15+6,22	6,01+6,22	6,15+6,22
/ V4±	**h= 250 mm**		-	5,09+5,59	6,73+5,59	7,62+6,22	8,53+6,22	9,38+6,22	10,30+6,22	12,01+6,22	12,29+6,22
shear force level	**h= 160 mm**	≥ a_s [cm²] B500	1,68+0,56	2,54+1,12	3,37+1,12	3,81+1,12	4,26+1,12	4,69+1,12	5,15+1,12	6,01+1,12	6,15+1,12
V6±	**h= 250 mm**		3,37+0,56	5,09+1,12	6,73+1,12	7,62+1,12	8,53+1,12	9,38+1,12	10,30+1,12	12,01+1,12	12,29+1,12
shear force level	**h= 160 mm**	≥ a_s [cm²] B500	1,68+1,12	2,54+2,24	3,37+2,24	3,81+2,24	4,26+2,24	4,69+2,24	5,15+2,24	6,01+2,99	6,15+2,99
V7±	**h= 250 mm**		3,37+1,12	5,09+2,24	6,73+2,24	7,62+2,24	8,53+2,24	9,38+2,24	10,30+2,24	12,01+2,99	12,29+2,99
shear force level	**h= 160 mm**	≥ a_s [cm²] B500	1,68+2,33	2,54+4,66	3,37+4,66	3,81+4,66	4,26+4,66	4,69+4,66	5,15+4,66	6,01+4,66	6,15+4,66
V8±	**h= 250 mm**		3,37+2,33	5,09+4,66	6,73+4,66	7,62+4,66	8,53+4,66	9,38+4,66	10,30+4,66	12,01+4,66	12,29+4,66

Egcobox Typ WOS	MM10-K	MM20	MM25	MM30	MM35	MM45	MM50	MM55	MM60
Elementlänge l [mm]	500	1000	1000	1000	1000	1000	1000	1000	1000

MM-WOS: minimum width of joist b_w 220 mm (concrete cover 30 mm)

item ⑤ - link reinforcement in wall / element at direct support (all shear force level - a_s lapping reinforcement)											
connection	**h= 160 mm**	≥ a_s [cm²] B500	1,50	2,27	3,00	3,40	3,80	4,18	4,59	5,35	5,48
height	**h= 250 mm**	≥ a_s [cm²] B500	3,00	4,54	6,01	6,79	7,61	8,37	9,18	10,71	10,95
item ⑥ - link reinforcement / element at indirect support (a_s lapping reinforcement + a_s transverse shear force)											
shear force level VS	**h= 160 mm**	≥ a_s [cm²] B500	1,50+0,56	2,27+1,12	3,00+1,12	3,40+1,12	3,80+1,12	4,18+1,12	4,59+1,12	5,35+1,12	5,48+1,12
/ VS±	**h= 250 mm**		3,00+0,56	4,54+1,12	6,01+1,12	6,79+1,12	7,61+1,12	8,37+1,12	9,18+1,12	10,71+1,12	10,95+1,12
shear force level V1	**h= 160 mm**	≥ a_s [cm²] B500	1,50+1,00	2,27+1,99	3,00+1,99	3,40+1,99	3,80+1,99	4,18+1,99	4,59+1,99	5,35+1,99	5,48+1,99
/ V1±	**h= 250 mm**		3,00+1,00	4,54+1,99	6,01+1,99	6,79+1,99	7,61+1,99	8,37+1,99	9,18+1,99	10,71+1,99	10,95+1,99
shear force level V2	**h= 160 mm**	≥ a_s [cm²] B500	1,50+1,49	2,27+2,99	3,00+2,99	3,40+2,99	3,80+2,99	4,18+2,99	4,59+2,99	5,35+2,99	5,48+2,99
/ V2±	**h= 250 mm**		3,00+1,49	4,54+2,99	6,01+2,99	6,79+2,99	7,61+2,99	8,37+2,99	9,18+2,99	10,71+2,99	10,95+2,99
shear force level V3	**h= 160 mm**	≥ a_s [cm²] B500	1,50+1,99	2,27+3,98	3,00+3,98	3,40+3,98	3,80+3,98	4,18+3,98	4,59+3,98	5,35+3,98	5,48+3,98
/ V3±	**h= 250 mm**		3,00+1,99	4,54+3,98	6,01+3,98	6,79+3,98	7,61+3,98	8,37+3,98	9,18+3,98	10,71+3,98	10,95+3,98
shear force level V4	**h= 160 mm**	≥ a_s [cm²] B500	-	2,27+5,59	3,00+5,59	3,40+6,22	3,80+6,22	4,18+6,22	4,59+6,22	5,35+6,22	5,48+6,22
/ V4±	**h= 250 mm**		-	4,54+5,59	6,01+5,59	6,79+6,22	7,61+6,22	8,37+6,22	9,18+6,22	10,71+6,22	10,95+6,22
shear force level	**h= 160 mm**	≥ a_s [cm²] B500	1,50+0,56	2,27+1,12	3,00+1,12	3,40+1,12	3,80+1,12	4,18+1,12	4,59+1,12	5,35+1,12	5,48+1,12
V6±	**h= 250 mm**		3,00+0,56	4,54+1,12	6,01+1,12	6,79+1,12	7,61+1,12	8,37+1,12	9,18+1,12	10,71+1,12	10,95+1,12
shear force level	**h= 160 mm**	≥ a_s [cm²] B500	1,50+1,12	2,27+2,24	3,00+2,24	3,40+2,24	3,80+2,24	4,18+2,24	4,59+2,24	5,35+2,99	5,48+2,99
V7±	**h= 250 mm**		3,00+1,12	4,54+2,24	6,01+2,24	6,79+2,24	7,61+2,24	8,37+2,24	9,18+2,24	10,71+2,99	10,95+2,99
shear force level	**h= 160 mm**	≥ a_s [cm²] B500	1,50+2,33	2,27+4,66	3,00+4,66	3,40+4,66	3,80+4,66	4,18+4,66	4,59+4,66	5,35+4,66	5,48+4,66
V8±	**h= 250 mm**		3,00+2,33	4,54+4,66	6,01+4,66	6,79+4,66	7,61+4,66	8,37+4,66	9,18+4,66	10,71+4,66	10,95+4,66

MM-WOS: minimum width of joist b_w 250 mm (concrete cover 30 mm)

item ⑤ - link reinforcement in wall / element at direct support (all shear force level - a_s lapping reinforcement)											
connection	**h= 160 mm**	≥ a_s [cm²] B500	1,29	1,95	2,59	2,92	3,27	3,60	3,95	4,60	4,71
height	**h= 250 mm**	≥ a_s [cm²] B500	2,59	3,91	5,17	5,85	6,55	7,20	7,89	9,21	9,42
item ⑥ - link reinforcement / element at indirect support (a_s lapping reinforcement + a_s transverse shear force)											
shear force level VS	**h= 160 mm**	≥ a_s [cm²] B500	1,29+0,56	1,95+1,12	2,59+1,12	2,92+1,12	3,27+1,12	3,60+1,12	3,95+1,12	4,60+1,12	4,71+1,12
/ VS±	**h= 250 mm**		2,59+0,56	3,91+1,12	5,17+1,12	5,85+1,12	6,55+1,12	7,20+1,12	7,89+1,12	9,21+1,12	9,42+1,12
shear force level V1	**h= 160 mm**	≥ a_s [cm²] B500	1,29+1,00	1,95+1,99	2,59+1,99	2,92+1,99	3,27+1,99	3,60+1,99	3,95+1,99	4,60+1,99	4,71+1,99
/ V1±	**h= 250 mm**		2,59+1,00	3,91+1,99	5,17+1,99	5,85+1,99	6,55+1,99	7,20+1,99	7,89+1,99	9,21+1,99	9,42+1,99
shear force level V2	**h= 160 mm**	≥ a_s [cm²] B500	1,29+1,49	1,95+2,99	2,59+2,99	2,92+2,99	3,27+2,99	3,60+2,99	3,95+2,99	4,60+2,99	4,71+2,99
/ V2±	**h= 250 mm**		2,59+1,49	3,91+2,99	5,17+2,99	5,85+2,99	6,55+2,99	7,20+2,99	7,89+2,99	9,21+2,99	9,42+2,99
shear force level V3	**h= 160 mm**	≥ a_s [cm²] B500	1,29+1,99	1,95+3,98	2,59+3,98	2,92+3,98	3,27+3,98	3,60+3,98	3,95+3,98	4,60+3,98	4,71+3,98
/ V3±	**h= 250 mm**		2,59+1,99	3,91+3,98	5,17+3,98	5,85+3,98	6,55+3,98	7,20+3,98	7,89+3,98	9,21+3,98	9,42+3,98
shear force level V4	**h= 160 mm**	≥ a_s [cm²] B500	-	1,95+5,59	2,59+5,59	2,92+6,22	3,27+6,22	3,60+6,22	3,95+6,22	4,60+6,22	4,71+6,22
/ V4±	**h= 250 mm**		-	3,91+5,59	5,17+5,59	5,85+6,22	6,55+6,22	7,20+6,22	7,89+6,22	9,21+6,22	9,42+6,22
shear force level	**h= 160 mm**	≥ a_s [cm²] B500	1,29+0,56	1,95+1,12	2,59+1,12	2,92+1,12	3,27+1,12	3,60+1,12	3,95+1,12	4,60+1,12	4,71+1,12
V6±	**h= 250 mm**		2,59+0,56	3,91+1,12	5,17+1,12	5,85+1,12	6,55+1,12	7,20+1,12	7,89+1,12	9,21+1,12	9,42+1,12
shear force level	**h= 160 mm**	≥ a_s [cm²] B500	1,29+1,12	1,95+2,24	2,59+2,24	2,92+2,24	3,27+2,24	3,60+2,24	3,95+2,24	4,60+2,99	4,71+2,99
V7±	**h= 250 mm**		2,59+1,12	3,91+2,24	5,17+2,24	5,85+2,24	6,55+2,24	7,20+2,24	7,89+2,24	9,21+2,99	9,42+2,99
shear force level	**h= 160 mm**	≥ a_s [cm²] B500	1,29+2,33	1,95+4,66	2,59+4,66	2,92+4,66	3,27+4,66	3,60+4,66	3,95+4,66	4,60+4,66	4,71+4,66
V8±	**h= 250 mm**		2,59+2,33	3,91+4,66	5,17+4,66	5,85+4,66	6,55+4,66	7,20+4,66	7,89+4,66	9,21+4,66	9,42+4,66

design proposal
direct support

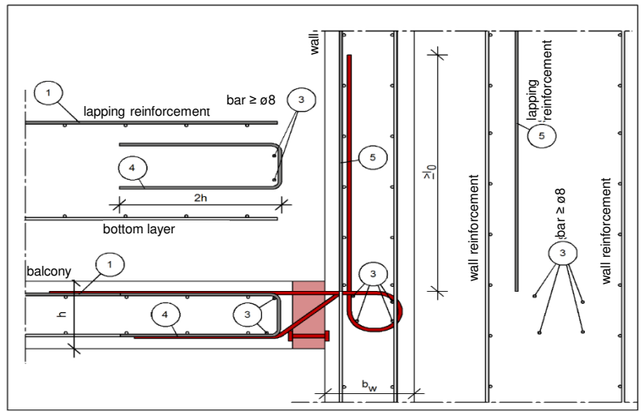

indirect support

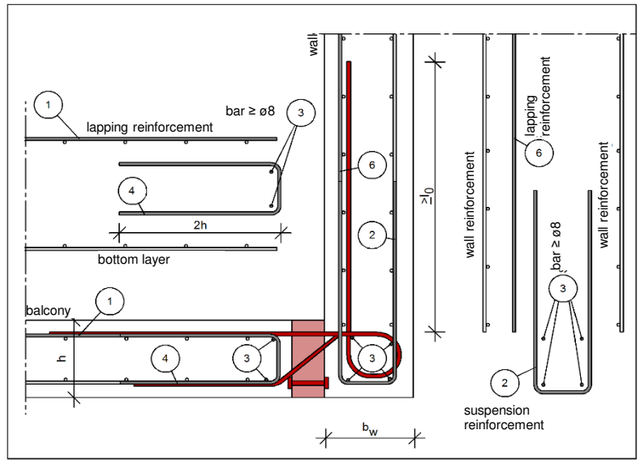

item ③+④ - structural reinforcement
In the slab edge of the u-bar reinforcement is respectively to arrange ≥ ø8 (item ③).
On the balcony side, it is recommended to design the edge reinforcement for the shear force V_{Ed} / f_{yd} ≥ ø6/250 mm according to EN 1992 (item ④ - vs. item ②).

The suggested lapping reinforcement (α_6=1,5) is selected (item ①) to transfer 100% of the M_{Rd} of the Egcobox® (height Egcobox® = height floor). An other reinforcement selection is possible.
In case of an other reinforcement selection shall be approved the lapping reinforcement in accordance with EN 1992. The reinforcement cross section or the lapping length can be derated in reference of utilization proportional M_{Ed} / M_{Rd}.
The lapping reinforcement must be approved by the structural engineer.

The proposed steel cross-section a_s (item ②) covers the maximum design transverse force V_{Rd} of the Egcobox®. In case of smaller actions, the edge reinforcement may be determined with V_{Ed} / f_{yd} ≥ ø6/250 mm.

Item ⑤ or item ⑥ applies to the specified required minimum widths of the wall (b_w) and the connection height (h) of the Egcobox.
In between, interpolation can be performed. For larger wall widths, a reduction of the required reinforcement is possible.
When selecting the reinforcement, the reinforcement rules and the lap lengths must be taken into account. Ø6/250 mm is recommended as the minimum reinforcement.

The specifications apply to good bonding conditions.

The specified connection reinforcement is required exclusively for the static transfer of the cutting forces from the cantilever slab connection.
The statically required beam-reinforcement is not taken into account and shown. This must be additionally dimensioned by the structural engineer.
The specified connection reinforcement is only a suggestion. The structural engineer in charge must check the feasibility of the design.
The distribution of the Egcobox® reinforcement and the required minimum wall widths must be observed.
In the case of alternating shear forces, the embedment length of the shear force bar must be taken into account when selecting the wall width.

Design table Egcobox® type MM -BH / -WU / -BHS / -WUS - C25/30

for cantilever slabs with height offset or wall connection for transmission of moment and shear force, insulation 80 mm

	Egcobox type			MM10-K	MM20	MM25	MM30	MM35	MM45	MM50	MM55	MM60	MM65	MM70	MM75	MM80
				-BH / -WU / -BHS / -WUS												
	length of element [mm]			500	1000	1000	1000	1000	1000	1000	1000	1000	1000	1000	1000	1000
	concrete cover [mm]			M_{Rd} [kNm/element]												
	C30	C35	C50													
height of connection [mm] good bonding conditions		**160**	175	-10,5	-15,8	-21,1	-22,9	-26,3	-28,6	-31,6	-36,8	-40,6	-44,7	-48,1	-48,8	-52,8
	160	165	**180**	-11,1	-16,7	-22,3	-24,3	-27,8	-30,3	-33,4	-39,0	-43,0	-47,3	-51,0	-51,6	-55,9
	165	170	185	-11,7	-17,6	-23,5	-25,6	-29,4	-32,0	-35,2	-41,1	-45,4	-50,0	-53,8	-54,5	-59,0
	170	175	190	-12,4	-18,5	-24,7	-26,9	-30,9	-33,6	-37,1	-43,3	-47,8	-52,6	-56,6	-57,4	-62,1
	175	**180**	195	-13,0	-19,5	-25,9	-28,2	-32,4	-35,3	-38,9	-45,4	-50,2	-55,2	-59,5	-60,2	-65,3
	180	185	**200**	-13,6	-20,4	-27,2	-29,6	-34,0	-37,0	-40,8	-47,5	-52,6	-57,8	-62,3	-63,1	-68,4
	185	190	205	-14,2	-21,3	-28,4	-30,9	-35,5	-38,6	-42,6	-49,7	-55,0	-60,5	-65,1	-66,0	-71,5
	190	195	210	-14,8	-22,2	-29,6	-32,2	-37,0	-40,3	-44,4	-51,8	-57,4	-63,1	-68,0	-68,8	-74,6
	195	**200**	215	-15,4	-23,1	-30,8	-33,6	-38,6	-42,0	-46,3	-54,0	-59,8	-65,7	-70,8	-71,7	-77,7
	200	205	**220**	-16,0	-24,0	-32,1	-34,9	-40,1	-43,6	-48,1	-56,1	-62,1	-68,4	-73,6	-74,6	-80,8
	205	210	225	-16,6	-25,0	-33,3	-36,2	-41,6	-45,3	-49,9	-58,3	-64,5	-71,0	-76,4	-77,4	-83,9
	210	215	230	-17,3	-25,9	-34,5	-37,6	-43,1	-47,0	-51,8	-60,4	-66,9	-73,6	-79,3	-80,3	-87,0
	215	**220**	235	-17,9	-26,8	-35,7	-38,9	-44,7	-48,6	-53,6	-62,5	-69,3	-76,3	-82,1	-83,2	-90,1
	220	225	**240**	-18,5	-27,7	-37,0	-40,2	-46,2	-50,3	-55,4	-64,7	-71,7	-78,9	-84,9	-86,1	-93,2
	225	230	245	-19,1	-28,6	-38,2	-41,6	-47,7	-52,0	-57,3	-66,8	-74,1	-81,5	-87,8	-88,9	-96,3
	230	235	250	-19,7	-29,6	-39,4	-42,9	-49,3	-53,6	-59,1	-69,0	-76,5	-84,1	-90,6	-91,8	-99,4
	235	**240**	255	-20,3	-30,5	-40,6	-44,2	-50,8	-55,3	-60,9	-71,1	-78,9	-86,8	-93,4	-94,7	-102,5
	240	245	**260**	-20,9	-31,4	-41,9	-45,6	-52,3	-57,0	-62,8	-73,2	-81,3	-89,4	-96,3	-97,5	-105,7
	245	250	265	-21,5	-32,3	-43,1	-46,9	-53,8	-58,6	-64,6	-75,4	-83,7	-92,0	-99,1	-100,4	-108,8
	250	255	270	-22,2	-33,2	-44,3	-48,2	-55,4	-60,3	-66,5	-77,5	-86,1	-94,7	-101,9	-103,3	-111,9
	255	**260**	275	-22,8	-34,1	-45,5	-49,6	-56,9	-62,0	-68,3	-79,7	-88,4	-97,3	-104,8	-106,1	-115,0
	260	265	**280**	-23,4	-35,1	-46,8	-50,9	-58,4	-63,6	-70,1	-81,8	-90,8	-99,9	-107,6	-109,0	-118,1
	265	270	285	-24,0	-36,0	-48,0	-52,2	-60,0	-65,3	-72,0	-84,0	-93,2	-102,5	-110,4	-111,9	-121,2
	270	275	290	-24,6	-36,9	-49,2	-53,6	-61,5	-67,0	-73,8	-86,1	-95,6	-105,2	-113,3	-114,7	-124,3
	275	**280**	295	-25,2	-37,8	-50,4	-54,9	-63,0	-68,6	-75,6	-88,2	-98,0	-107,8	-116,1	-117,6	-127,4
	280	285	**300**	-25,8	-38,7	-51,6	-56,2	-64,6	-70,3	-77,5	-90,4	-100,4	-110,4	-118,9	-120,5	-130,5
	285	290		-26,4	-39,7	-52,9	-57,6	-66,1	-72,0	-79,3	-92,5	-102,8	-113,1	-121,8	-123,3	-133,6
	290	295		-27,0	-40,6	-54,1	-58,9	-67,6	-73,6	-81,1	-94,7	-105,2	-115,7	-124,6	-126,2	-136,7
	295	**300**		-27,7	-41,5	-55,3	-60,2	-69,1	-75,3	-83,0	-96,8	-107,6	-118,3	-127,4	-129,1	-139,8
	300			-28,3	-42,4	-56,5	-61,6	-70,7	-77,0	-84,8	-98,9	-110,0	-121,0	-130,2	-131,9	-142,9

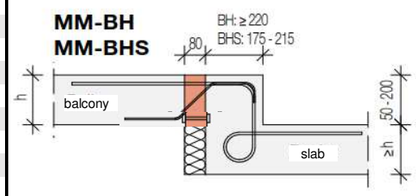

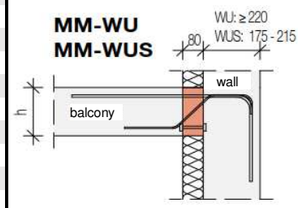

Shear force level		concrete cover [mm]			V_{Rd} [kN/element]												
		C30	C35	C50													
height of connection [mm] good bonding conditions	VS	160-190	160-195	175-210	24,3	48,7	48,7	48,7	48,7	48,7	48,7	48,7	48,7	48,7	48,7	48,7	48,7
		195-300	200-300	215-300	24,3	48,7	48,7	48,7	48,7	48,7	48,7	48,7	48,7	48,7	48,7	48,7	48,7
	V1	160-190	160-195	175-210	43,3	86,5	86,5	86,5	86,5	86,5	86,5	86,5	86,5	86,5	86,5	86,5	86,5
		195-300	200-300	215-300	43,3	86,5	86,5	86,5	86,5	86,5	86,5	86,5	86,5	86,5	86,5	86,5	86,5
	V2	160-190	160-195	175-210	64,9	129,8	129,8	129,8	129,8	129,8	129,8	129,8	129,8	129,8	129,8	129,8	129,8
		195-300	200-300	215-300	64,9	129,8	129,8	129,8	129,8	129,8	129,8	129,8	129,8	129,8	129,8	129,8	129,8
	V3	160-190	160-195	175-210	86,5	173,1	173,1	173,1	173,1	173,1	173,1	173,1	173,1	173,1	173,1	173,1	173,1
		195-300	200-300	215-300	86,5	173,1	173,1	173,1	173,1	173,1	173,1	173,1	173,1	173,1	173,1	173,1	173,1
	V4	175-190	180-195	195-210	-	266,5	266,5	266,5	270,4	270,4	270,4	270,4	270,4	270,4	270,4	270,4	270,4
		195-300	200-300	215-300	-	266,5	266,5	266,5	270,4	270,4	270,4	270,4	270,4	270,4	270,4	270,4	270,4
	V6±	160-190	160-195	175-210	+24,3/ -24,3	+48,7/ -48,7	+48,7/ -48,7	+48,7/ -48,7	+48,7/ -48,7	+48,7/ -48,7	+48,7/ -48,7	+48,7/ -48,7	+48,7/ -48,7	+48,7/ -48,7	+48,7/ -48,7	+48,7/ -48,7	+48,7/ -48,7
		195-300	200-300	215-300	+24,3/ -24,3	+48,7/ -48,7	+48,7/ -48,7	+48,7/ -48,7	+48,7/ -48,7	+48,7/ -48,7	+48,7/ -48,7	+48,7/ -48,7	+48,7/ -48,7	+48,7/ -48,7	+48,7/ -48,7	+48,7/ -48,7	+48,7/ -48,7
	V7±	160-190	160-195	175-210	+48,7/ -36,5	+97,4/ -73	+97,4/ -73	+97,4/ -73	+97,4/ -73	+97,4/ -73	+97,4/ -73	+129,8/ -86,5	+129,8/ -86,5	+129,8/ -86,5	+129,8/ -86,5	+129,8/ -86,5	+129,8/ -86,5
		195-300	200-300	215-300	+48,7/ -36,5	+97,4/ -73	+97,4/ -73	+97,4/ -73	+97,4/ -73	+97,4/ -73	+97,4/ -73	+129,8/ -86,5	+129,8/ -86,5	+129,8/ -86,5	+129,8/ -86,5	+129,8/ -86,5	+129,8/ -86,5
	V8±	175-190	180-195	195-210	+101,4/ -101,4	+202,8/ -202,8	+202,8/ -202,8	+202,8/ -202,8	+202,8/ -202,8	+202,8/ -202,8	+202,8/ -202,8	+202,8/ -202,8	+202,8/ -202,8	+202,8/ -202,8	+202,8/ -202,8	+202,8/ -202,8	+202,8/ -202,8
		195-300	200-300	215-300	+101,4/ -101,4	+202,8/ -202,8	+202,8/ -202,8	+202,8/ -202,8	+202,8/ -202,8	+202,8/ -202,8	+202,8/ -202,8	+202,8/ -202,8	+202,8/ -202,8	+202,8/ -202,8	+202,8/ -202,8	+202,8/ -202,8	+202,8/ -202,8

Shear force level VS to V4 also possible with lifting shear force (-24.3 kN/element depending on height of connection/concrete cover) (designation: VS±, V1±, V2±, V3± or V4±)

Reinforcement Egcobox® type MM -BH / -WU / -BHS / -WUS

Egcobox type	MM10-K	MM20	MM25	MM30	MM35	MM45	MM50	MM55	MM60	MM65	MM70	MM75	MM80
	-BH / -WU / -BHS / -WUS												
length of element [mm]	**500**	**1000**	**1000**	**1000**	**1000**	**1000**	**1000**	**1000**	**1000**	**1000**	**1000**	**1000**	**1000**
wall / beam width b_w: -HV / - WO / -BH / -WU [mm]	**≥ 220**												
wall / beam width b_w: -BHS / -WUS [mm]	**$175 \leq b_w < 220$**												
tensile bars	4 ø 8	6 ø 8	8 ø 8	9 ø 8	10 ø 8	11 ø 8	12 ø 8	14 ø 8	10 ø 10	11 ø 10	12 ø 10	12 ø 10	13 ø 10
length of tensile bars [mm]	depending on bending form												
compression bearings	2 ø 12	4 ø 12	4 ø 12	4 ø 12	5 ø 12	5 ø 12	6 ø 12	7 ø 12	8 ø 12	9 ø 12	10 ø 12	11 ø 12	12 ø 12
shear force bars VS	2 ø 6	4 ø 6	4 ø 6	4 ø 6	4 ø 6	4 ø 6	4 ø 6	4 ø 6	4 ø 6	4 ø 6	4 ø 6	4 ø 6	4 ø 6
shear force bars V1	2 ø 8	4 ø 8	4 ø 8	4 ø 8	4 ø 8	4 ø 8	4 ø 8	4 ø 8	4 ø 8	4 ø 8	4 ø 8	4 ø 8	4 ø 8
shear force bars V2	3 ø 8	6 ø 8	6 ø 8	6 ø 8	6 ø 8	6 ø 8	6 ø 8	6 ø 8	6 ø 8	6 ø 8	6 ø 8	6 ø 8	6 ø 8
shear force bars V3	4 ø 8	8 ø 8	8 ø 8	8 ø 8	8 ø 8	8 ø 8	8 ø 8	8 ø 8	8 ø 8	8 ø 8	8 ø 8	8 ø 8	8 ø 8
shear force bars V4	-	8 ø 10	8 ø 10	8 ø 10	8 ø 10	8 ø 10	8 ø 10	8 ø 10	8 ø 10	8 ø 10	8 ø 10	8 ø 10	8 ø 10
shear force bars VS±	-	4 ø6 / 2 ø6	4 ø6 / 2 ø6	4 ø6 / 2 ø6	4 ø6 / 2 ø6	4 ø6 / 2 ø6	4 ø6 / 2 ø6	4 ø6 / 2 ø6	4 ø6 / 2 ø6	4 ø6 / 2 ø6	4 ø6 / 2 ø6	4 ø6 / 2 ø6	4 ø6 / 2 ø6
shear force bars V1±	-	4 ø8 / 2 ø6	4 ø8 / 2 ø6	4 ø8 / 2 ø6	4 ø8 / 2 ø6	4 ø8 / 2 ø6	4 ø8 / 2 ø6	4 ø8 / 2 ø6	4 ø8 / 2 ø6	4 ø8 / 2 ø6	4 ø8 / 2 ø6	4 ø8 / 2 ø6	4 ø8 / 2 ø6
shear force bars V2±	-	6 ø8 / 2 ø6	6 ø8 / 2 ø6	6 ø8 / 2 ø6	6 ø8 / 2 ø6	6 ø8 / 2 ø6	6 ø8 / 2 ø6	6 ø8 / 2 ø6	6 ø8 / 2 ø6	6 ø8 / 2 ø6	6 ø8 / 2 ø6	6 ø8 / 2 ø6	6 ø8 / 2 ø6
shear force bars V3±	-	8 ø8 / 2 ø6	8 ø8 / 2 ø6	8 ø8 / 2 ø6	8 ø8 / 2 ø6	8 ø8 / 2 ø6	8 ø8 / 2 ø6	8 ø8 / 2 ø6	8 ø8 / 2 ø6	8 ø8 / 2 ø6	8 ø8 / 2 ø6	8 ø8 / 2 ø6	8 ø8 / 2 ø6
shear force bars V4±	-	8 ø10 / 2 ø6	8 ø10 / 2 ø6	8 ø10 / 2 ø6	8 ø10 / 2 ø6	8 ø10 / 2 ø6	8 ø10 / 2 ø6	8 ø10 / 2 ø6	8 ø10 / 2 ø6	8 ø10 / 2 ø6	8 ø10 / 2 ø6	8 ø10 / 2 ø6	8 ø10 / 2 ø6
shear force bars V6±	2 ø6 / 2 ø6	4 ø6 / 4 ø6	4 ø6 / 4 ø6	4 ø6 / 4 ø6	4 ø6 / 4 ø6	4 ø6 / 4 ø6	4 ø6 / 4 ø6	4 ø6 / 4 ø6	4 ø6 / 4 ø6	4 ø6 / 4 ø6	4 ø6 / 4 ø6	4 ø6 / 4 ø6	4 ø6 / 4 ø6
shear force bars V7±	4 ø6 / 3 ø6	8 ø6 / 6 ø6	8 ø6 / 6 ø6	8 ø6 / 6 ø6	8 ø6 / 6 ø6	8 ø6 / 6 ø6	8 ø6 / 6 ø6	6 ø8 / 4 ø8	6 ø8 / 4 ø8	6 ø8 / 4 ø8	6 ø8 / 4 ø8	6 ø8 / 4 ø8	6 ø8 / 4 ø8
shear force bars V8±	3 ø10 / 3 ø10	6 ø10 / 6 ø10	6 ø10 / 6 ø10	6 ø10 / 6 ø10	6 ø10 / 6 ø10	6 ø10 / 6 ø10	6 ø10 / 6 ø10	6 ø10 / 6 ø10	6 ø10 / 6 ø10	6 ø10 / 6 ø10	6 ø10 / 6 ø10	6 ø10 / 6 ø10	6 ø10 / 6 ø10
applicable expansion joint distances [m]	**11,7**	**11,7**	**11,7**	**11,7**	**11,7**	**11,7**	**11,7**	**11,7**	**11,7**	**11,7**	**11,7**	**11,7**	**11,7**

Torsion of the slab in the area of the insulation joint - Egcobox® type MM -BH / -WU / -BHS / -WUS

Egcobox type			MM10-K	MM20	MM25	MM30	MM35	MM45	MM50	MM55	MM60	MM65	MM70	MM75	MM80
			-BH / -WU / -BHS / -WUS												
length of element [mm]			**500**	**1000**	**1000**	**1000**	**1000**	**1000**	**1000**	**1000**	**1000**	**1000**	**1000**	**1000**	**1000**
concrete cover [mm]			**banking factor k [1/kNm]**												
C30	**C35**	**C50**													
	160	175	1,308	0,822	0,654	0,598	0,523	0,486	0,436	0,374	0,385	0,348	0,318	0,313	0,288
160	165	**180**	1,168	0,734	0,584	0,534	0,467	0,434	0,389	0,334	0,343	0,311	0,284	0,279	0,257
165	170	185	1,049	0,660	0,525	0,480	0,420	0,390	0,350	0,300	0,308	0,279	0,255	0,250	0,231
170	175	190	0,948	0,596	0,474	0,433	0,379	0,353	0,316	0,271	0,278	0,252	0,230	0,226	0,208
175	**180**	195	0,861	0,541	0,430	0,393	0,344	0,320	0,287	0,246	0,252	0,228	0,209	0,205	0,189
180	185	**200**	0,785	0,493	0,392	0,359	0,314	0,292	0,262	0,224	0,230	0,208	0,190	0,187	0,172
185	190	205	0,719	0,452	0,359	0,329	0,287	0,267	0,240	0,205	0,210	0,190	0,174	0,171	0,157
190	195	210	0,661	0,415	0,330	0,302	0,264	0,246	0,220	0,189	0,193	0,175	0,160	0,157	0,145
195	**200**	215	0,609	0,383	0,305	0,278	0,244	0,227	0,203	0,174	0,178	0,161	0,147	0,145	0,133
200	205	**220**	0,564	0,354	0,282	0,258	0,225	0,210	0,188	0,161	0,165	0,149	0,136	0,134	0,123
205	210	225	0,523	0,329	0,261	0,239	0,209	0,194	0,174	0,149	0,153	0,138	0,126	0,124	0,114
210	215	230	0,486	0,306	0,243	0,222	0,195	0,181	0,162	0,139	0,142	0,128	0,117	0,115	0,106
215	**220**	235	0,454	0,285	0,227	0,207	0,181	0,169	0,151	0,130	0,132	0,120	0,109	0,107	0,099
220	225	**240**	0,424	0,267	0,212	0,194	0,170	0,158	0,141	0,121	0,124	0,112	0,102	0,100	0,093
225	230	245	0,397	0,250	0,199	0,182	0,159	0,148	0,132	0,114	0,116	0,105	0,096	0,094	0,087
230	235	250	0,373	0,235	0,187	0,171	0,149	0,139	0,124	0,107	0,109	0,098	0,090	0,088	0,081
235	**240**	255	0,351	0,221	0,175	0,160	0,140	0,131	0,117	0,100	0,102	0,092	0,084	0,083	0,076
240	245	**260**	0,331	0,208	0,165	0,151	0,132	0,123	0,110	0,094	0,096	0,087	0,080	0,078	0,072
245	250	265	0,312	0,196	0,156	0,143	0,125	0,116	0,104	0,089	0,091	0,082	0,075	0,074	0,068
250	255	270	0,295	0,186	0,148	0,135	0,118	0,110	0,098	0,084	0,086	0,078	0,071	0,070	0,064
255	**260**	275	0,280	0,176	0,140	0,128	0,112	0,104	0,093	0,080	0,081	0,074	0,067	0,066	0,061
260	265	**280**	0,265	0,167	0,133	0,121	0,106	0,099	0,088	0,076	0,077	0,070	0,064	0,063	0,058
265	270	285	0,252	0,158	0,126	0,115	0,101	0,094	0,084	0,072	0,073	0,066	0,060	0,059	0,055
270	275	290	0,239	0,150	0,120	0,109	0,096	0,089	0,080	0,068	0,070	0,063	0,057	0,056	0,052
275	**280**	295	0,228	0,143	0,114	0,104	0,091	0,085	0,076	0,065	0,066	0,060	0,055	0,054	0,050
280	285	**300**	0,217	0,137	0,109	0,099	0,087	0,081	0,072	0,062	0,063	0,057	0,052	0,051	0,047
285	290		0,207	0,130	0,104	0,095	0,083	0,077	0,069	0,059	0,060	0,054	0,050	0,049	0,045
290	295		0,198	0,124	0,099	0,091	0,079	0,074	0,066	0,057	0,057	0,052	0,047	0,047	0,043
295	**300**		0,189	0,119	0,095	0,087	0,076	0,070	0,063	0,054	0,055	0,050	0,045	0,045	0,041
300			0,181	0,114	0,091	0,083	0,072	0,067	0,060	0,052	0,053	0,048	0,043	0,043	0,039

height of connection [mm] good bonding conditions

Rotation spring stiffness Egcobox® type MM -BH / -WU / -BHS / -WUS

	Egcobox type			MM10-K	MM20	MM25	MM30	MM35	MM45	MM50	MM55	MM60	MM65	MM70	MM75	MM80
				-BH / -WU / -BHS / -WUS												
	length of element [mm]			500	1000	1000	1000	1000	1000	1000	1000	1000	1000	1000	1000	1000
	concrete cover [mm]			Rotation spring stiffness [kNm/rad/Element]												
	C30	C35	C50													
height of connection [mm] good bonding conditions		**160**	175	765	1217	1530	1673	1912	2056	2294	2677	2598	2871	3143	3199	3470
	160	165	**180**	856	1362	1713	1873	2141	2302	2569	2997	2913	3218	3523	3586	3890
	165	170	185	953	1516	1906	2085	2382	2562	2859	3335	3245	3586	3926	3996	4334
	170	175	190	1055	1678	2110	2307	2637	2836	3164	3692	3596	3973	4350	4427	4802
	175	**180**	195	1162	1848	2324	2542	2905	3124	3486	4066	3965	4381	4796	4881	5294
	180	185	**200**	1274	2027	2548	2787	3185	3425	3822	4459	4351	4808	5263	5357	5811
	185	190	205	1391	2214	2783	3044	3478	3741	4174	4870	4756	5255	5753	5855	6351
	190	195	210	1514	2409	3028	3312	3785	4070	4542	5299	5178	5721	6264	6375	6915
	195	**200**	215	1642	2612	3283	3591	4104	4414	4925	5746	5619	6208	6797	6918	7503
	200	205	**220**	1775	2823	3549	3882	4436	4771	5324	6211	6077	6715	7351	7482	8116
	205	210	225	1913	3043	3825	4184	4781	5142	5738	6694	6554	7241	7928	8069	8752
	210	215	230	2056	3271	4112	4497	5139	5527	6167	7195	7048	7788	8526	8678	9412
	215	**220**	235	2204	3507	4408	4822	5510	5926	6612	7715	7561	8354	9146	9308	10097
	220	225	**240**	2358	3751	4715	5157	5894	6339	7073	8252	8091	8940	9787	9961	10805
	225	230	245	2516	4003	5033	5505	6291	6766	7549	8807	8640	9546	10451	10637	11537
	230	235	250	2680	4264	5361	5863	6701	7206	8041	9381	9206	10172	11136	11334	12294
	235	**240**	255	2849	4533	5699	6233	7123	7661	8548	9973	9790	10817	11843	12053	13074
	240	245	**260**	3024	4810	6047	6614	7559	8129	9071	10583	10393	11483	12571	12795	13878
	245	250	265	3203	5096	6406	7007	8008	8611	9609	11211	11013	12168	13322	13559	14707
	250	255	270	3388	5389	6775	7410	8469	9108	10163	11857	11651	12873	14094	14344	15559
	255	**260**	275	3577	5691	7155	7825	8943	9618	10732	12521	12308	13598	14888	15152	16435
	260	265	**280**	3772	6001	7545	8252	9431	10142	11317	13203	12982	14343	15703	15983	17336
	265	270	285	3972	6320	7945	8689	9931	10680	11917	13903	13674	15108	16540	16835	18260
	270	275	290	4178	6646	8355	9138	10444	11232	12533	14622	14384	15893	17400	17709	19209
	275	**280**	295	4388	6981	8776	9599	10970	11797	13164	15358	15113	16698	18280	18606	20181
	280	285	**300**	4604	7324	9207	10070	11509	12377	13811	16113	15859	17522	19183	19524	21178
	285	290		4824	7675	9649	10553	12061	12971	14473	16885	16623	18366	20107	20465	22198
	290	295		5050	8035	10101	11048	12626	13578	15151	17676	17405	19231	21054	21428	23243
	295	**300**		5281	8402	10563	11553	13204	14199	15844	18485	18205	20115	22021	22413	24311
	300			5518	8778	11035	12070	13794	14835	16553	19312	19023	21019	23011	23420	25403

On-site reinforcement Egcobox® type MM-BH / BHS - C25/30

for balconies with balcony offset

Egcobox type BH / BHS	MM10-K	MM20	MM25	MM30	MM35	MM45	MM50	MM55	MM60	MM65	MM70	MM75	MM80
length of element [mm]	**500**	**1000**	**1000**	**1000**	**1000**	**1000**	**1000**	**1000**	**1000**	**1000**	**1000**	**1000**	**1000**
reqired minimum width of joist b_w [mm]	175	175	175	175	175	175	175	175	175	175	175	175	175
Egcobox ø rebar [mm]	ø 8	ø 8	ø 8	ø 8	ø 8	ø 8	ø 8	ø 8	ø 10	ø 10	ø 10	ø 10	ø 10
Egcobox l_0 rebar [mm]	475	475	475	475	475	475	475	475	612	612	612	612	612
item ① - lapping reinforcement / element													
≥ as [cm²] B500	2,81	4,22	5,63	6,13	7,04	7,66	8,44	9,85	11,00	12,10	13,02	13,19	13,02
suggested on-site reinforcement [mm]	ø 10	ø 10	ø 10	ø 10	ø 10	ø 10	ø 10	ø 10	ø 12	ø 10	ø 10	ø 10	ø 12
item ② - balcony-side suspension reinforcement shear force / element													
shear force level VS / VS± ≥ a_s [cm²] B500	-	1,12	1,12	1,12	1,12	1,12	1,12	1,12	1,12	1,12	1,12	1,12	1,12
shear force level V1 / V1± ≥ a_s [cm²] B500	-	1,99	1,99	1,99	1,99	1,99	1,99	1,99	1,99	1,99	1,99	1,99	1,99
shear force level V2 / V2± ≥ a_s [cm²] B500	-	2,99	2,99	2,99	2,99	2,99	2,99	2,99	2,99	2,99	2,99	2,99	2,99
shear force level V3 / V3± ≥ a_s [cm²] B500	-	3,98	3,98	3,98	3,98	3,98	3,98	3,98	3,98	3,98	3,98	3,98	3,98
shear force level V4 / V4± ≥ a_s [cm²] B500	-	6,13	6,13	6,13	6,22	6,22	6,22	6,22	6,22	6,22	6,22	6,22	6,22
shear force level V6± ≥ a_s [cm²] B500	0,56	1,12	1,12	1,12	1,12	1,12	1,12	1,12	1,12	1,12	1,12	1,12	1,12
shear force level V7± ≥ a_s [cm²] B500	1,12	2,24	2,24	2,24	2,24	2,24	2,24	2,99	2,99	2,99	2,99	2,99	2,99
shear force level V8± ≥ a_s [cm²] B500	2,33	4,66	4,66	4,66	4,66	4,66	4,66	4,66	4,66	4,66	4,66	4,66	4,66

MM-BHS: minimum width of joist b_w 175 mm (concrete cover 30 mm)

item ⑤ - link reinforcement slabsides / element at direct support (all shear force level - a_s lapping reinforcement)														
offset balcony	**a≤ 135 mm**	≥ a_s [cm²] B500	2,22	3,33	4,44	4,86	5,59	6,08	6,75	7,88	8,79	9,60	10,41	10,55	10,41
offset balcony	**a= 260 mm**	≥ a_s [cm²] B500	4,99	7,49	9,98	10,95	12,57	13,68	15,19	17,72	19,78	21,60	23,43	23,73	23,43
item ⑥ - link reinforcement / element at indirect support (a_s lapping reinforcement + a_s transverse shear force)														
shear force level VS / VS±	**a≤ 135 mm**	≥ a_s [cm²] B500	2,22+0,56	3,33+1,12	4,44+1,12	4,86+1,12	5,59+1,12	6,08+1,12	6,75+1,12	7,88+1,12	8,79+1,12	9,60+1,12	10,41+1,12	10,55+1,12	11,43+1,12
	a= 260 mm		4,99+0,56	7,49+1,12	9,98+1,12	10,95+1,12	12,57+1,12	13,68+1,12	15,19+1,12	17,72+1,12	19,78+1,12	21,60+1,12	23,43+1,12	23,73+1,12	25,71+1,12
shear force level V1 / V1±	**a≤ 135 mm**	≥ a_s [cm²] B500	2,22+1,00	3,33+1,99	4,44+1,99	4,86+1,99	5,59+1,99	6,08+1,99	6,75+1,99	7,88+1,99	8,79+1,99	9,60+1,99	10,41+1,99	10,55+1,99	11,43+1,99
	a= 260 mm		4,99+1,00	7,49+1,99	9,98+1,99	10,95+1,99	12,57+1,99	13,68+1,99	15,19+1,99	17,72+1,99	19,78+1,99	21,60+1,99	23,43+1,99	23,73+1,99	25,71+1,99
shear force level V2 / V2±	**a≤ 135 mm**	≥ a_s [cm²] B500	2,22+1,49	3,33+2,99	4,44+2,99	4,86+2,99	5,59+2,99	6,08+2,99	6,75+2,99	7,88+2,99	8,79+2,99	9,60+2,99	10,41+2,99	10,55+2,99	11,43+2,99
	a= 260 mm		4,99+1,49	7,49+2,99	9,98+2,99	10,95+2,99	12,57+2,99	13,68+2,99	15,19+2,99	17,72+2,99	19,78+2,99	21,60+2,99	23,43+2,99	23,73+2,99	25,71+2,99
shear force level V3 / V3±	**a≤ 135 mm**	≥ a_s [cm²] B500	2,22+1,99	3,33+3,98	4,44+3,98	4,86+3,98	5,59+3,98	6,08+3,98	6,75+3,98	7,88+3,98	8,79+3,98	9,60+3,98	10,41+3,98	10,55+3,98	11,43+3,98
	a= 260 mm		4,99+1,99	7,49+3,98	9,98+3,98	10,95+3,98	12,57+3,98	13,68+3,98	15,19+3,98	17,72+3,98	19,78+3,98	21,60+3,98	23,43+3,98	23,73+3,98	25,71+3,98
shear force level V4 / V4±	**a≤ 135 mm**	≥ a_s [cm²] B500	-	3,33+6,13	4,44+6,13	4,86+6,13	5,59+6,22	6,08+6,22	6,75+6,22	7,88+6,22	8,79+6,22	9,60+6,22	10,41+6,22	10,55+6,22	11,43+6,22
	a= 260 mm		-	7,49+6,13	9,98+6,13	10,95+6,13	12,57+6,22	13,68+6,22	15,19+6,22	17,72+6,22	19,78+6,22	21,60+6,22	23,43+6,22	23,73+6,22	25,71+6,22
shear force level V6±	**a≤ 135 mm**	≥ a_s [cm²] B500	2,22+0,56	3,33+1,12	4,44+1,12	4,86+1,12	5,59+1,12	6,08+1,12	6,75+1,12	7,88+1,12	8,79+1,12	9,60+1,12	10,41+1,12	10,55+1,12	11,43+1,12
	a= 260 mm		4,99+0,56	7,49+1,12	9,98+1,12	10,95+1,12	12,57+1,12	13,68+1,12	15,19+1,12	17,72+1,12	19,78+1,12	21,60+1,12	23,43+1,12	23,73+1,12	25,71+1,12
shear force level V7±	**a≤ 135 mm**	≥ a_s [cm²] B500	2,22+1,12	3,33+2,24	4,44+2,24	4,86+2,24	5,59+2,24	6,08+2,24	6,75+2,24	7,88+2,99	8,79+2,99	9,60+2,99	10,41+2,99	10,55+2,99	11,43+2,99
	a= 260 mm		4,99+1,12	7,49+2,24	9,98+2,24	10,95+2,24	12,57+2,24	13,68+2,24	15,19+2,24	17,72+2,99	19,78+2,99	21,60+2,99	23,43+2,99	23,73+2,99	25,71+2,99
shear force level V8±	**a≤ 135 mm**	≥ a_s [cm²] B500	2,22+2,33	3,33+4,66	4,44+4,66	4,86+4,66	5,59+4,66	6,08+4,66	6,75+4,66	7,88+4,66	8,79+4,66	9,60+4,66	10,41+4,66	10,55+4,66	11,43+4,66
	a= 260 mm		4,99+2,33	7,49+4,66	9,98+4,66	10,95+4,66	12,57+4,66	13,68+4,66	15,19+4,66	17,72+4,66	19,78+4,66	21,60+4,66	23,43+4,66	23,73+4,66	25,71+4,66

MM-BHS: minimum width of joist b_w 200 mm (concrete cover 30 mm)

item ⑤ - link reinforcement slabsides / element at direct support (all shear force level - a_s lapping reinforcement)														
offset balcony	**a≤ 135 mm**	≥ a_s [cm²] B500	1,88	2,83	3,77	4,13	4,74	5,16	5,72	6,67	7,45	8,19	8,82	8,94	9,68
offset balcony	**a= 260 mm**	≥ a_s [cm²] B500	4,24	6,36	8,48	9,29	10,66	11,61	12,87	15,02	16,76	18,44	19,85	20,11	21,79
item ⑥ - link reinforcement / element at indirect support (a_s lapping reinforcement + a_s transverse shear force)														
shear force level VS / VS±	**a≤ 135 mm**	≥ a_s [cm²] B500	1,88+0,56	2,83+1,12	3,77+1,12	4,13+1,12	4,74+1,12	5,16+1,12	5,72+1,12	6,67+1,12	7,45+1,12	8,19+1,12	8,82+1,12	8,94+1,12	9,68+1,12
	a= 260 mm		4,24+0,56	6,36+1,12	8,48+1,12	9,29+1,12	10,66+1,12	11,61+1,12	12,87+1,12	15,02+1,12	16,76+1,12	18,44+1,12	19,85+1,12	20,11+1,12	21,79+1,12
shear force level V1 / V1±	**a≤ 135 mm**	≥ a_s [cm²] B500	1,88+1,00	2,83+1,99	3,77+1,99	4,13+1,99	4,74+1,99	5,16+1,99	5,72+1,99	6,67+1,99	7,45+1,99	8,19+1,99	8,82+1,99	8,94+1,99	9,68+1,99
	a= 260 mm		4,24+1,00	6,36+1,99	8,48+1,99	9,29+1,99	10,66+1,99	11,61+1,99	12,87+1,99	15,02+1,99	16,76+1,99	18,44+1,99	19,85+1,99	20,11+1,99	21,79+1,99
shear force level V2 / V2±	**a≤ 135 mm**	≥ a_s [cm²] B500	1,88+1,49	2,83+2,99	3,77+2,99	4,13+2,99	4,74+2,99	5,16+2,99	5,72+2,99	6,67+2,99	7,45+2,99	8,19+2,99	8,82+2,99	8,94+2,99	9,68+2,99
	a= 260 mm		4,24+1,49	6,36+2,99	8,48+2,99	9,29+2,99	10,66+2,99	11,61+2,99	12,87+2,99	15,02+2,99	16,76+2,99	18,44+2,99	19,85+2,99	20,11+2,99	21,79+2,99
shear force level V3 / V3±	**a≤ 135 mm**	≥ a_s [cm²] B500	1,88+1,99	2,83+3,98	3,77+3,98	4,13+3,98	4,74+3,98	5,16+3,98	5,72+3,98	6,67+3,98	7,45+3,98	8,19+3,98	8,82+3,98	8,94+3,98	9,68+3,98
	a= 260 mm		4,24+1,99	6,36+3,98	8,48+3,98	9,29+3,98	10,66+3,98	11,61+3,98	12,87+3,98	15,02+3,98	16,76+3,98	18,44+3,98	19,85+3,98	20,11+3,98	21,79+3,98
shear force level V4 / V4±	**a≤ 135 mm**	≥ a_s [cm²] B500	-	2,83+6,13	3,77+6,13	4,13+6,13	4,74+6,22	5,16+6,22	5,72+6,22	6,67+6,22	7,45+6,22	8,19+6,22	8,82+6,22	8,94+6,22	9,68+6,22
	a= 260 mm		-	6,36+6,13	8,48+6,13	9,29+6,13	10,66+6,22	11,61+6,22	12,87+6,22	15,02+6,22	16,76+6,22	18,44+6,22	19,85+6,22	20,11+6,22	21,79+6,22
shear force level V6±	**a≤ 135 mm**	≥ a_s [cm²] B500	1,88+0,56	2,83+1,12	3,77+1,12	4,13+1,12	4,74+1,12	5,16+1,12	5,72+1,12	6,67+1,12	7,45+1,12	8,19+1,12	8,82+1,12	8,94+1,12	9,68+1,12
	a= 260 mm		4,24+0,56	6,36+1,12	8,48+1,12	9,29+1,12	10,66+1,12	11,61+1,12	12,87+1,12	15,02+1,12	16,76+1,12	18,44+1,12	19,85+1,12	20,11+1,12	21,79+1,12
shear force level V7±	**a≤ 135 mm**	≥ a_s [cm²] B500	1,88+1,12	2,83+2,24	3,77+2,24	4,13+2,24	4,74+2,24	5,16+2,24	5,72+2,24	6,67+2,99	7,45+2,99	8,19+2,99	8,82+2,99	8,94+2,99	9,68+2,99
	a= 260 mm		4,24+1,12	6,36+2,24	8,48+2,24	9,29+2,24	10,66+2,24	11,61+2,24	12,87+2,24	15,02+2,99	16,76+2,99	18,44+2,99	19,85+2,99	20,11+2,99	21,79+2,99
shear force level V8±	**a≤ 135 mm**	≥ a_s [cm²] B500	1,88+2,33	2,83+4,66	3,77+4,66	4,13+4,66	4,74+4,66	5,16+4,66	5,72+4,66	6,67+4,66	7,45+4,66	8,19+4,66	8,82+4,66	8,94+4,66	9,68+4,66
	a= 260 mm		4,24+2,33	6,36+4,66	8,48+4,66	9,29+4,66	10,66+4,66	11,61+4,66	12,87+4,66	15,02+4,66	16,76+4,66	18,44+4,66	19,85+4,66	20,11+4,66	21,79+4,66

Egcobox type BH / BHS	MM10-K	MM20	MM25	MM30	MM35	MM45	MM50	MM55	MM60	MM65	MM70	MM75	MM80
Elementlänge l [mm]	**500**	**1000**	**1000**	**1000**	**1000**	**1000**	**1000**	**1000**	**1000**	**1000**	**1000**	**1000**	**1000**

MM-BH: minimum width of joist b_w 220 mm (concrete cover 30 mm)

item ⑤ - link reinforcement slabsides / element at direct support (all shear force level - a_s lapping reinforcement)														
offset balcony	**a≤ 135 mm**	≥ a_s [cm²] B500	1,68	2,52	3,36	3,68	4,23	4,60	5,10	5,95	6,64	7,30	7,87	7,97	8,63
offset balcony	**a= 260 mm**	≥ a_s [cm²] B500	3,78	5,68	7,57	8,28	9,51	10,35	11,47	13,39	14,94	16,43	17,70	17,93	19,42
item ⑥ - link reinforcement / element at indirect support (a_s lapping reinforcement + a_s transverse shear force)														
shear force level	**a≤ 135 mm**	≥ a_s [cm²] B500	1,68+0,56	2,52+1,12	3,36+1,12	3,68+1,12	4,23+1,12	4,60+1,12	5,10+1,12	5,95+1,12	6,64+1,12	7,30+1,12	7,87+1,12	7,97+1,12	8,63+1,12
VS / VS±	**a= 260 mm**		3,78+0,56	5,68+1,12	7,57+1,12	8,28+1,12	9,51+1,12	10,35+1,12	11,47+1,12	13,39+1,12	14,94+1,12	16,43+1,12	17,70+1,12	17,93+1,12	19,42+1,12
shear force level	**a≤ 135 mm**	≥ a_s [cm²] B500	1,68+1,00	2,52+1,99	3,36+1,99	3,68+1,99	4,23+1,99	4,60+1,99	5,10+1,99	5,95+1,99	6,64+1,99	7,30+1,99	7,87+1,99	7,97+1,99	8,63+1,99
V1 / V1±	**a= 260 mm**		3,78+1,00	5,68+1,99	7,57+1,99	8,28+1,99	9,51+1,99	10,35+1,99	11,47+1,99	13,39+1,99	14,94+1,99	16,43+1,99	17,70+1,99	17,93+1,99	19,42+1,99
shear force level	**a≤ 135 mm**	≥ a_s [cm²] B500	1,68+1,49	2,52+2,99	3,36+2,99	3,68+2,99	4,23+2,99	4,60+2,99	5,10+2,99	5,95+2,99	6,64+2,99	7,30+2,99	7,87+2,99	7,97+2,99	8,63+2,99
V2 / V2±	**a= 260 mm**		3,78+1,49	5,68+2,99	7,57+2,99	8,28+2,99	9,51+2,99	10,35+2,99	11,47+2,99	13,39+2,99	14,94+2,99	16,43+2,99	17,70+2,99	17,93+2,99	19,42+2,99
shear force level	**a≤ 135 mm**	≥ a_s [cm²] B500	1,68+1,99	2,52+3,98	3,36+3,98	3,68+3,98	4,23+3,98	4,60+3,98	5,10+3,98	5,95+3,98	6,64+3,98	7,30+3,98	7,87+3,98	7,97+3,98	8,63+3,98
V3 / V3±	**a= 260 mm**		3,78+1,99	5,68+3,98	7,57+3,98	8,28+3,98	9,51+3,98	10,35+3,98	11,47+3,98	13,39+3,98	14,94+3,98	16,43+3,98	17,70+3,98	17,93+3,98	19,42+3,98
shear force level	**a≤ 135 mm**	≥ a_s [cm²] B500	-	2,52+6,13	3,36+6,13	3,68+6,13	4,23+6,22	4,60+6,22	5,10+6,22	5,95+6,22	6,64+6,22	7,30+6,22	7,87+6,22	7,97+6,22	8,63+6,22
V4 / V4±	**a= 260 mm**		-	5,68+6,13	7,57+6,13	8,28+6,13	9,51+6,22	10,35+6,22	11,47+6,22	13,39+6,22	14,94+6,22	16,43+6,22	17,70+6,22	17,93+6,22	19,42+6,22
shear force level	**a≤ 135 mm**	≥ a_s [cm²] B500	1,68+0,56	2,52+1,12	3,36+1,12	3,68+1,12	4,23+1,12	4,60+1,12	5,10+1,12	5,95+1,12	6,64+1,12	7,30+1,12	7,87+1,12	7,97+1,12	8,63+1,12
V6±	**a= 260 mm**		3,78+0,56	5,68+1,12	7,57+1,12	8,28+1,12	9,51+1,12	10,35+1,12	11,47+1,12	13,39+1,12	14,94+1,12	16,43+1,12	17,70+1,12	17,93+1,12	19,42+1,12
shear force level	**a≤ 135 mm**	≥ a_s [cm²] B500	1,68+1,12	2,52+2,24	3,36+2,24	3,68+2,24	4,23+2,24	4,60+2,24	5,10+2,24	5,95+2,99	6,64+2,99	7,30+2,99	7,87+2,99	7,97+2,99	8,63+2,99
V7±	**a= 260 mm**		3,78+1,12	5,68+2,24	7,57+2,24	8,28+2,24	9,51+2,24	10,35+2,24	11,47+2,24	13,39+2,99	14,94+2,99	16,43+2,99	17,70+2,99	17,93+2,99	19,42+2,99
shear force level	**a≤ 135 mm**	≥ a_s [cm²] B500	1,68+2,33	2,52+4,66	3,36+4,66	3,68+4,66	4,23+4,66	4,60+4,66	5,10+4,66	5,95+4,66	6,64+4,66	7,30+4,66	7,87+4,66	7,97+4,66	8,63+4,66
V8±	**a= 260 mm**		3,78+2,33	5,68+4,66	7,57+4,66	8,28+4,66	9,51+4,66	10,35+4,66	11,47+4,66	13,39+4,66	14,94+4,66	16,43+4,66	17,70+4,66	17,93+4,66	19,42+4,66

MM-BH: minimum width of joist b_w 250 mm (concrete cover 30 mm)

item ⑤ - link reinforcement slabsides / element at direct support (all shear force level - a_s lapping reinforcement)														
offset balcony	**a≤ 135 mm**	≥ a_s [cm²] B500	1,45	2,17	2,90	3,17	3,64	3,96	4,38	5,12	5,71	6,28	6,76	6,85	7,42
offset balcony	**a= 260 mm**	≥ a_s [cm²] B500	3,26	4,89	6,52	7,13	8,18	8,91	9,87	11,51	12,85	14,13	15,22	15,41	16,70
item ⑥ - link reinforcement / element at indirect support (a_s lapping reinforcement + a_s transverse shear force)														
shear force level	**a≤ 135 mm**	≥ a_s [cm²] B500	1,45+0,56	2,17+1,12	2,90+1,12	3,17+1,12	3,64+1,12	3,96+1,12	4,38+1,12	5,12+1,12	5,71+1,12	6,28+1,12	6,76+1,12	6,85+1,12	7,42+1,12
VS / VS±	**a= 260 mm**		3,26+0,56	4,89+1,12	6,52+1,12	7,13+1,12	8,18+1,12	8,91+1,12	9,87+1,12	11,51+1,12	12,85+1,12	14,13+1,12	15,22+1,12	15,41+1,12	16,70+1,12
shear force level	**a≤ 135 mm**	≥ a_s [cm²] B500	1,45+1,00	2,17+1,99	2,90+1,99	3,17+1,99	3,64+1,99	3,96+1,99	4,38+1,99	5,12+1,99	5,71+1,99	6,28+1,99	6,76+1,99	6,85+1,99	7,42+1,99
V1 / V1±	**a= 260 mm**		3,26+1,00	4,89+1,99	6,52+1,99	7,13+1,99	8,18+1,99	8,91+1,99	9,87+1,99	11,51+1,99	12,85+1,99	14,13+1,99	15,22+1,99	15,41+1,99	16,70+1,99
shear force level	**a≤ 135 mm**	≥ a_s [cm²] B500	1,45+1,49	2,17+2,99	2,90+2,99	3,17+2,99	3,64+2,99	3,96+2,99	4,38+2,99	5,12+2,99	5,71+2,99	6,28+2,99	6,76+2,99	6,85+2,99	7,42+2,99
V2 / V2±	**a= 260 mm**		3,26+1,49	4,89+2,99	6,52+2,99	7,13+2,99	8,18+2,99	8,91+2,99	9,87+2,99	11,51+2,99	12,85+2,99	14,13+2,99	15,22+2,99	15,41+2,99	16,70+2,99
shear force level	**a≤ 135 mm**	≥ a_s [cm²] B500	1,45+1,99	2,17+3,98	2,90+3,98	3,17+3,98	3,64+3,98	3,96+3,98	4,38+3,98	5,12+3,98	5,71+3,98	6,28+3,98	6,76+3,98	6,85+3,98	7,42+3,98
V3 / V3±	**a= 260 mm**		3,26+1,99	4,89+3,98	6,52+3,98	7,13+3,98	8,18+3,98	8,91+3,98	9,87+3,98	11,51+3,98	12,85+3,98	14,13+3,98	15,22+3,98	15,41+3,98	16,70+3,98
shear force level	**a≤ 135 mm**	≥ a_s [cm²] B500	-	2,17+6,13	2,90+6,13	3,17+6,13	3,64+6,22	3,96+6,22	4,38+6,22	5,12+6,22	5,71+6,22	6,28+6,22	6,76+6,22	6,85+6,22	7,42+6,22
V4 / V4±	**a= 260 mm**		-	4,89+6,13	6,52+6,13	7,13+6,13	8,18+6,22	8,91+6,22	9,87+6,22	11,51+6,22	12,85+6,22	14,13+6,22	15,22+6,22	15,41+6,22	16,70+6,22
shear force level	**a≤ 135 mm**	≥ a_s [cm²] B500	1,45+0,56	2,17+1,12	2,90+1,12	3,17+1,12	3,64+1,12	3,96+1,12	4,38+1,12	5,12+1,12	5,71+1,12	6,28+1,12	6,76+1,12	6,85+1,12	7,42+1,12
V6±	**a= 260 mm**		3,26+0,56	4,89+1,12	6,52+1,12	7,13+1,12	8,18+1,12	8,91+1,12	9,87+1,12	11,51+1,12	12,85+1,12	14,13+1,12	15,22+1,12	15,41+1,12	16,70+1,12
shear force level	**a≤ 135 mm**	≥ a_s [cm²] B500	1,45+1,12	2,17+2,24	2,90+2,24	3,17+2,24	3,64+2,24	3,96+2,24	4,38+2,24	5,12+2,99	5,71+2,99	6,28+2,99	6,76+2,99	6,85+2,99	7,42+2,99
V7±	**a= 260 mm**		3,26+1,12	4,89+2,24	6,52+2,24	7,13+2,24	8,18+2,24	8,91+2,24	9,87+2,24	11,51+2,99	12,85+2,99	14,13+2,99	15,22+2,99	15,41+2,99	16,70+2,99
shear force level	**a≤ 135 mm**	≥ a_s [cm²] B500	1,45+2,33	2,17+4,66	2,90+4,66	3,17+4,66	3,64+4,66	3,96+4,66	4,38+4,66	5,12+4,66	5,71+4,66	6,28+4,66	6,76+4,66	6,85+4,66	7,42+4,66
V8±	**a= 260 mm**		3,26+2,33	4,89+4,66	6,52+4,66	7,13+4,66	8,18+4,66	8,91+4,66	9,87+4,66	11,51+4,66	12,85+4,66	14,13+4,66	15,22+4,66	15,41+4,66	16,70+4,66

item ③+④ - structural reinforcement
In the slab edge of the u-bar reinforcement is respectively to arrange ≥ ø8 (item ③).
On the balcony side, it is recommended to design the edge reinforcement for the shear force V_{Ed} / f_{yd} ≥ ø6/250 mm according to EN 1992 (item ④ - vs. item ②).

The dimension of the balcony offset BH [mm] must be specified in the element name, e.g. MM20-BHS120-C35-h200.

The suggested lapping reinforcement (α_6=1,5) is selected (item ①) to transfer 100% of the M_{Rd} of the Egcobox® (height Egcobox® = height floor). An other reinforcement selection is possible.
In case of an other reinforcement selection shall be approved the lapping reinforcement in accordance with EN 1992. The reinforcement cross section or the lapping length can be derated in reference of utilization proportional M_{Ed} / M_{Rd}.
The lapping reinforcement must be approved by the structural engineer.

The proposed steel cross-section a_s (item ②) covers the maximum design transverse force V_{Rd} of the Egcobox®. In case of smaller actions, the edge reinforcement may be determined with V_{Ed} / f_{yd} ≥ ø6/250 mm.

Item ⑤ or item ⑥ applies to the specified required minimum widths of the joist (b_w) and the height of the offset (***a*** ≤135 mm; ***a*** = 260 mm). For larger joist widths, a reduction of the required reinforcement is possible.
In between, interpolation can be performed. For larger joist widths, a reduction of the required reinforcement is possible.
When selecting the reinforcement, the reinforcement rules and the lap lengths must be taken into account. Ø6/250 mm is recommended as the minimum reinforcement.

Item ⑧ must be verified and planned by the structural engineer (corresponds to item ① for slab thickness = balcony slab thickness;
for slab thickness ≠ balcony slab thickness, an allowance is required or reduction is possible). The load transmission into the slab must be verified by the structural engineer.
The slab-side stirrups Item ⑦ are structurally recommended at 50 % of the main reinforcement Item ⑧ according to DAfStb Booklet 600.
For reinforcing frame corners, we recommend inclined reinforcement item ⑨ according to DAfStb Booklet 600 with AsS > 50% Pos. ⑧ or > 50% Pos. ⑤ or ⑥.

The specifications apply to good bonding conditions.

The specified connection reinforcement is required exclusively for the static transfer of the cutting forces from the cantilever slab connection.
The statically required beam-reinforcement is not taken into account and shown. This must be additionally dimensioned by the structural engineer.
The specified connection reinforcement is only a suggestion. The structural engineer in charge must check the feasibility of the design.
The distribution of the Egcobox® reinforcement and the required minimum beam widths must be observed.
In the case of alternating shear forces, the embedment length of the shear force bar must be taken into account when selecting the beam width.

design proposal

direct support

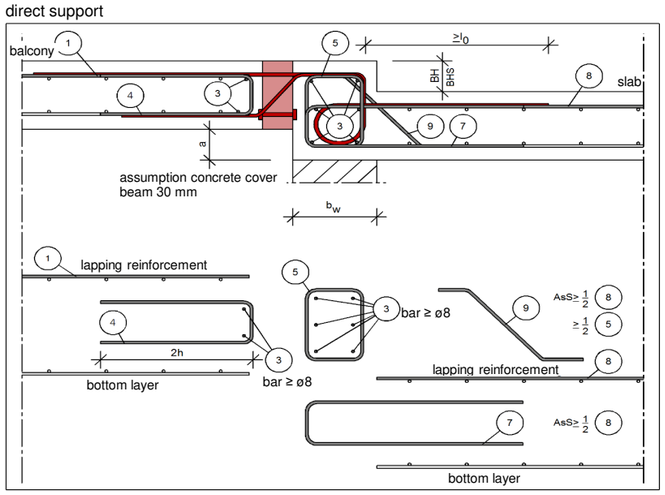

indirect support

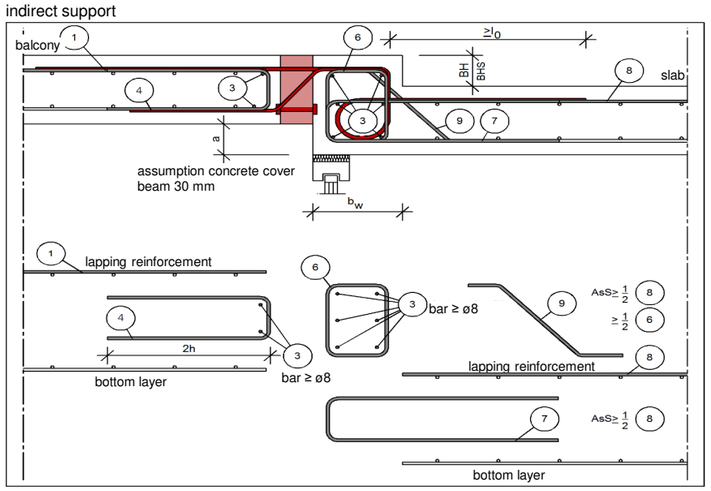

On-site reinforcement Egcobox® type MM-WU / WUS - C25/30

for balconies with overlap in wall downwards

Egcobox type WU / WUS	MM10-K	MM20	MM25	MM30	MM35	MM45	MM50	MM55	MM60	MM65	MM70	MM75	MM80
length of element [mm]	**500**	**1000**	**1000**	**1000**	**1000**	**1000**	**1000**	**1000**	**1000**	**1000**	**1000**	**1000**	**1000**
reqired minimum width of joist b_w [mm]	175	175	175	175	175	175	175	175	175	175	175	175	175
Egcobox ø rebar [mm]	ø 8	ø 8	ø 8	ø 8	ø 8	ø 8	ø 8	ø 8	ø 10	ø 10	ø 10	ø 10	ø 10
Egcobox l_0 rebar [mm]	475	475	475	475	475	475	475	475	612	612	612	612	612
item ① - lapping reinforcement / element													
≥ as [cm²] B500	2,81	4,22	5,63	6,13	7,04	7,66	8,44	9,85	11,00	12,10	13,02	13,19	14,29
suggested on-site reinforcement [mm]	ø 10	ø 10	ø 10	ø 10	ø 10	ø 10	ø 10	ø 10	ø 12	ø 12	ø 12	ø 12	ø 12
item ② - balcony-side suspension reinforcement shear force / element													
shear force level VS / VS± ≥ a_s [cm²] B500	-	1,12	1,12	1,12	1,12	1,12	1,12	1,12	1,12	1,12	1,12	1,12	1,12
shear force level V1 / V1± ≥ a_s [cm²] B500	-	1,99	1,99	1,99	1,99	1,99	1,99	1,99	1,99	1,99	1,99	1,99	1,99
shear force level V2 / V2± ≥ a_s [cm²] B500	-	2,99	2,99	2,99	2,99	2,99	2,99	2,99	2,99	2,99	2,99	2,99	2,99
shear force level V3 / V3± ≥ a_s [cm²] B500	-	3,98	3,98	3,98	3,98	3,98	3,98	3,98	3,98	3,98	3,98	3,98	3,98
shear force level V4 / V4± ≥ a_s [cm²] B500	-	6,13	6,13	6,13	6,22	6,22	6,22	6,22	6,22	6,22	6,22	6,22	6,22
shear force level V6± ≥ a_s [cm²] B500	0,56	1,12	1,12	1,12	1,12	1,12	1,12	1,12	1,12	1,12	1,12	1,12	1,12
shear force level V7± ≥ a_s [cm²] B500	1,12	2,24	2,24	2,24	2,24	2,24	2,24	2,99	2,99	2,99	2,99	2,99	2,99
shear force level V8± ≥ a_s [cm²] B500	2,33	4,66	4,66	4,66	4,66	4,66	4,66	4,66	4,66	4,66	4,66	4,66	4,66

MM-WUS: minimum width of joist b_w 175 mm (concrete cover 30 mm)

item ⑤ - link reinforcement in wall / element at direct support (all shear force level - a_s lapping reinforcement)														
connection	**h= 160 mm**	≥ a_s [cm²] B500	2,00	2,99	3,99	4,38	5,03	5,47	6,08	7,09	7,91	8,64	9,37	9,49	10,28
height	**h= 250 mm**	≥ a_s [cm²] B500	3,99	5,99	7,99	8,76	10,05	10,95	12,15	14,18	15,82	17,28	18,74	18,99	20,57

MM-WUS: minimum width of joist b_w 200 mm (concrete cover 30 mm)

item ⑤ - link reinforcement in wall / element at direct support (all shear force level - a_s lapping reinforcement)														
connection	**h= 160 mm**	≥ a_s [cm²] B500	1,70	2,54	3,39	3,71	4,26	4,64	5,15	6,01	6,70	7,33	7,94	8,05	8,72
height	**h= 250 mm**	≥ a_s [cm²] B500	3,39	5,09	6,78	7,43	8,53	9,29	10,30	12,01	13,41	14,66	15,88	16,09	17,43

MM-WU: minimum width of joist b_w 220 mm (concrete cover 30 mm)

item ⑤ - link reinforcement in wall / element at direct support (all shear force level - a_s lapping reinforcement)														
connection	**h= 160 mm**	≥ a_s [cm²] B500	1,51	2,27	3,03	3,31	3,80	4,14	4,59	5,35	5,98	6,54	7,08	7,17	7,77
height	**h= 250 mm**	≥ a_s [cm²] B500	3,03	4,54	6,05	6,63	7,61	8,28	9,18	10,71	11,95	13,08	14,16	14,34	15,54

MM-WU: minimum width of joist b_w 250 mm (concrete cover 30 mm)

item ⑤ - link reinforcement in wall / element at direct support (all shear force level - a_s lapping reinforcement)														
connection	**h= 160 mm**	≥ a_s [cm²] B500	1,30	1,95	2,61	2,85	3,27	3,56	3,95	4,60	5,14	5,63	6,09	6,17	6,68
height	**h= 250 mm**	≥ a_s [cm²] B500	2,61	3,91	5,21	5,70	6,55	7,13	7,89	9,21	10,28	11,25	12,17	12,33	13,36

item ③+④ - structural reinforcement

In the slab edge of the u-bar reinforcement is respectively to arrange ≥ ø8 (item ③).
On the balcony side, it is recommended to design the edge reinforcement for the shear force V_{Ed} / f_{yd} ≥ ø6/250 mm according to EN 1992 (item ④ - vs. item ②).

The suggested lapping reinforcement (α_6=1,5) is selected (item ①) to transfer 100% of the M_{Rd} of the Egcobox® (height Egcobox® = height floor). An other reinforcement selection is possible.
In case of an other reinforcement selection shall be approved the lapping reinforcement in accordance with EN 1992. The reinforcement cross section or the lapping length can be derated in reference of utilization proportional M_{Ed} / M_{Rd}.
The lapping reinforcement must be approved by the structural engineer.

The proposed steel cross-section a_s (item ②) covers the maximum design transverse force V_{Rd} of the Egcobox®. In case of smaller actions, the edge reinforcement may be determined with V_{Ed} / f_{yd} ≥ ø6/250 mm.

Item ⑤ applies to the specified required minimum widths of the wall (b_w) and the connection height (h) of the Egcobox.
In between, interpolation can be performed. For larger wall widths, a reduction of the required reinforcement is possible.
When selecting the reinforcement, the reinforcement rules and the lap lengths must be taken into account. Ø6/250 mm is recommended as the minimum reinforcement.

The specifications apply to good bonding conditions.

The specified connection reinforcement is required exclusively for the static transfer of the cutting forces from the cantilever slab connection.
The statically required beam-reinforcement is not taken into account and shown. This must be additionally dimensioned by the structural engineer.
The specified connection reinforcement is only a suggestion. The structural engineer in charge must check the feasibility of the design.
The distribution of the Egcobox® reinforcement and the required minimum wall widths must be observed.
In the case of alternating shear forces, the embedment length of the shear force bar must be taken into account when selecting the wall width.

design proposal

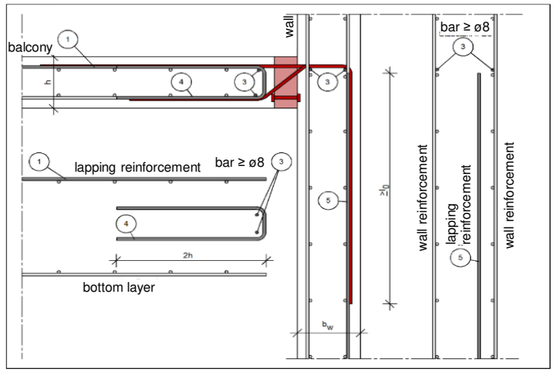

Design table Egcobox® type MM± - C25/30

for cantilever plates for transmission of positive and negative moments and shear forces, insulation 80 mm

	Egcobox type			MM20±	MM25±	MM30±	MM45±	MM50±	MM55±	MM60±	MM65±	MM70±	MM75±	MM80±	MM110±-K	MM120±-K	MM130±-K	MM150±-K
	length of element [mm]			1000	1000	1000	1000	1000	1000	1000	1000	1000	1000	1000	500	500	500	500
	concrete cover [mm]			M_{Rd} [kNm/element]														
	C30	C35	C50															
height of connection [mm] good bonding conditions		**160**	195	±15,0	±18,8	±22,5	±26,3	±30,0	±33,8	±37,5	±37,8	±43,2	±48,6	±54,0	±32,4	±36,5	±39,4	±48,3
	160	165	**200**	±15,9	±19,9	±23,9	±27,9	±31,8	±35,8	±39,8	±40,1	±45,8	±51,6	±57,3	±34,4	±38,7	±41,8	±51,4
	165	170	205	±16,8	±21,0	±25,2	±29,4	±33,7	±37,9	±42,1	±42,4	±48,5	±54,6	±60,6	±36,4	±41,0	±44,3	±54,5
	170	175	210	±17,7	±22,2	±26,6	±31,0	±35,5	±39,9	±44,3	±44,8	±51,2	±57,6	±64,0	±38,4	±43,2	±46,7	±57,5
	175	**180**	215	±18,6	±23,3	±28,0	±32,6	±37,3	±41,9	±46,6	±47,1	±53,8	±60,6	±67,3	±40,4	±45,5	±49,1	±60,6
	180	185	**220**	±19,5	±24,4	±29,3	±34,2	±39,1	±44,0	±48,9	±49,4	±56,5	±63,6	±70,6	±42,4	±47,7	±51,5	±63,6
	185	190	225	±20,4	±25,6	±30,7	±35,8	±40,9	±46,0	±51,1	±51,8	±59,2	±66,6	±74,0	±44,4	±50,0	±54,0	±66,7
	190	195	230	±21,4	±26,7	±32,0	±37,4	±42,7	±48,0	±53,4	±54,1	±61,8	±69,6	±77,3	±46,4	±52,2	±56,4	±69,8
	195	**200**	235	±22,3	±27,8	±33,4	±38,9	±44,5	±50,1	±55,6	±56,4	±64,5	±72,6	±80,6	±48,4	±54,5	±58,8	±72,8
	200	205	**240**	±23,2	±29,0	±34,7	±40,5	±46,3	±52,1	±57,9	±58,8	±67,2	±75,6	±83,9	±50,4	±56,7	±61,3	±75,9
	205	210	245	±24,1	±30,1	±36,1	±42,1	±48,1	±54,1	±60,2	±61,1	±69,8	±78,6	±87,3	±52,4	±59,0	±63,7	±78,9
	210	215	250	±25,0	±31,2	±37,5	±43,7	±49,9	±56,2	±62,4	±63,4	±72,5	±81,5	±90,6	±54,4	±61,2	±66,1	±82,0
	215	**220**	255	±25,9	±32,3	±38,8	±45,3	±51,8	±58,2	±64,7	±65,8	±75,2	±84,5	±93,9	±56,4	±63,5	±68,6	±85,1
	220	225	**260**	±26,8	±33,5	±40,2	±46,9	±53,6	±60,3	±67,0	±68,1	±77,8	±87,5	±97,3	±58,4	±65,7	±71,0	±88,1
	225	230	265	±27,7	±34,6	±41,5	±48,4	±55,4	±62,3	±69,2	±70,4	±80,5	±90,5	±100,6	±60,4	±68,0	±73,4	±91,2
	230	235	270	±28,6	±35,7	±42,9	±50,0	±57,2	±64,3	±71,5	±72,8	±83,1	±93,5	±103,9	±62,4	±70,2	±75,9	±94,2
	235	**240**	275	±29,5	±36,9	±44,2	±51,6	±59,0	±66,4	±73,7	±75,1	±85,8	±96,5	±107,3	±64,4	±72,5	±78,3	±97,3
	240	245	**280**	±30,4	±38,0	±45,6	±53,2	±60,8	±68,4	±76,0	±77,4	±88,5	±99,5	±110,6	±66,4	±74,7	±80,7	±100,4
	245	250	285	±31,3	±39,1	±47,0	±54,8	±62,6	±70,4	±78,3	±79,7	±91,1	±102,5	±113,9	±68,4	±77,0	±83,2	±103,4
	250	255	290	±32,2	±40,3	±48,3	±56,4	±64,4	±72,5	±80,5	±82,1	±93,8	±105,5	±117,3	±70,4	±79,2	±85,6	±106,5
	255	**260**	295	±33,1	±41,4	±49,7	±57,9	±66,2	±74,5	±82,8	±84,4	±96,5	±108,5	±120,6	±72,4	±81,5	±88,0	±109,5
	260	265	**300**	±34,0	±42,5	±51,0	±59,5	±68,0	±76,5	±85,0	±86,7	±99,1	±111,5	±123,9	±74,4	±83,7	±90,4	±112,6
	265	270		±34,9	±43,7	±52,4	±61,1	±69,8	±78,6	±87,3	±89,1	±101,8	±114,5	±127,3	±76,4	±86,0	±92,9	±115,7
	270	275		±35,8	±44,8	±53,7	±62,7	±71,7	±80,6	±89,6	±91,4	±104,5	±117,5	±130,6	±78,4	±88,2	±95,3	±118,7
	275	**280**		±36,7	±45,9	±55,1	±64,3	±73,5	±82,6	±91,8	±93,7	±107,1	±120,5	±133,9	±80,3	±90,5	±97,7	±121,8
	280	285		±37,6	±47,0	±56,5	±65,9	±75,3	±84,7	±94,1	±96,1	±109,8	±123,5	±137,2	±82,3	±92,7	±100,2	±124,8
	285	290		±38,5	±48,2	±57,8	±67,4	±77,1	±86,7	±96,4	±98,4	±112,5	±126,5	±140,6	±84,3	±95,0	±102,6	±127,9
	290	295		±39,4	±49,3	±59,2	±69,0	±78,9	±88,8	±98,6	±100,7	±115,1	±129,5	±143,9	±86,3	±97,2	±105,0	±131,0
	295	**300**		±40,4	±50,4	±60,5	±70,6	±80,7	±90,8	±100,9	±103,1	±117,8	±132,5	±147,2	±88,3	±99,5	±107,5	±134,0
	300			±41,3	±51,6	±61,9	±72,2	±82,5	±92,8	±103,1	±105,4	±120,5	±135,5	±150,6	±90,3	±101,7	±109,9	±137,1

Shear force level		concrete cover [mm]			V_{Rd} [kN/element]														
		C30	C35	C50															
height of connection [mm] good bonding conditions	VS	160-190	160-195	195-230	±48,7	±48,7	±48,7	±48,7	±48,7	±48,7	±48,7	±48,7	±48,7	±48,7	±48,7	±48,7	±48,7	±48,7	±48,7
		195-300	200-300	235-300	±48,7	±48,7	±48,7	±48,7	±48,7	±48,7	±48,7	±48,7	±48,7	±48,7	±48,7	±48,7	±48,7	±48,7	±48,7
	V1	160-190	160-195	195-230	±86,5	±86,5	±86,5	±86,5	±86,5	±86,5	±86,5	±86,5	±86,5	±86,5	±86,5	±86,5	±86,5	±86,5	±86,5
		195-300	200-300	235-300	±86,5	±86,5	±86,5	±86,5	±86,5	±86,5	±86,5	±86,5	±86,5	±86,5	±86,5	±86,5	±86,5	±86,5	±86,5
	V2	160-190	160-195	195-230	±129,8	±129,8	±129,8	±129,8	±129,8	±129,8	±129,8	±129,8	±129,8	±129,8	±129,8	±129,8	±129,8	±129,8	±129,8
		195-300	200-300	235-300	±129,8	±129,8	±129,8	±129,8	±129,8	±129,8	±129,8	±129,8	±129,8	±129,8	±129,8	±129,8	±129,8	±129,8	±129,8
	V3	160-190	160-195	195-230	±173,1	±173,1	±173,1	±173,1	±173,1	±173,1	±173,1	±173,1	±173,1	±173,1	±173,1	-	-	-	-
		195-300	200-300	235-300	±173,1	±173,1	±173,1	±173,1	±173,1	±173,1	±173,1	±173,1	±173,1	±173,1	±173,1	-	-	-	-
	V4	175-190	180-195	195-210	-	-	±202,8	±202,8	±202,8	±202,8	±202,8	±202,8	±202,8	±202,8	±202,8	-	-	-	-
		195-300	200-300	215-300	-	-	±202,8	±202,8	±202,8	±202,8	±202,8	±202,8	±202,8	±202,8	±202,8	-	-	-	-
	V5	175-190	180-195	195-210	-	-	-	-	±270,4	±270,4	±270,4	±270,4	±270,4	±270,4	±270,4	-	-	-	-
		195-300	200-300	215-300	-	-	-	-	±270,4	±270,4	±270,4	±270,4	±270,4	±270,4	±270,4	-	-	-	-

concrete cover:

C30: c_o = 30 mm, c_u = 30 mm

C35: c_o = 35 mm, c_u = 30 mm

C50: c_o = 50 mm, c_u = 50 mm

Reinforcement Egcobox® type MM±

Egcobox type	MM20±	MM25±	MM30±	MM45±	MM50±	MM55±	MM60±	MM65±	MM70±	MM75±	MM80±	MM110±-K	MM120±-K	MM130±-K	MM150±-K
length of element [mm]	**1000**	**1000**	**1000**	**1000**	**1000**	**1000**	**1000**	**1000**	**1000**	**1000**	**1000**	**500**	**500**	**500**	**500**
tensile bars	4 ø 12	5 ø 12	6 ø 12	7 ø 12	8 ø 12	9 ø 12	10 ø 12	7 ø 14	8 ø 14	9 ø 14	10 ø 14	6 ø 14	7 ø 14	8 ø 14	7 ø 16
length of tensile bars [mm]	1300	1300	1300	1300	1300	1300	1300	1580	1580	1580	1580	1580	1580	1580	2520
compression bars	4 ø 12	5 ø 12	6 ø 12	7 ø 12	8 ø 12	9 ø 12	10 ø 12	7 ø 14	8 ø 14	9 ø 14	10 ø 14	6 ø 14	7 ø 14	8 ø 14	7 ø 16
length of compression bars [mm]	1300	1300	1300	1300	1300	1300	1300	1580	1580	1580	1580	1580	1580	1580	2520
shear force bars VS	2x 4 ø 6	2x 4 ø 6	2x 4 ø 6	2x 4 ø 6	2x 4 ø 6	2x 4 ø 6	2x 4 ø 6	2x 4 ø 6	2x 4 ø 6	2x 4 ø 6	2x 4 ø 6	2x 4 ø 6	2x 4 ø 6	2x 4 ø 6	2x 4 ø 6
shear force bars V1	2x 4 ø 8	2x 4 ø 8	2x 4 ø 8	2x 4 ø 8	2x 4 ø 8	2x 4 ø 8	2x 4 ø 8	2x 4 ø 8	2x 4 ø 8	2x 4 ø 8	2x 4 ø 8	2x 4 ø 8	2x 4 ø 8	2x 4 ø 8	2x 4 ø 8
shear force bars V2	2x 6 ø 8	2x 6 ø 8	2x 6 ø 8	2x 6 ø 8	2x 6 ø 8	2x 6 ø 8	2x 6 ø 8	2x 6 ø 8	2x 6 ø 8	2x 6 ø 8	2x 6 ø 8	2x 6 ø 8	2x 6 ø 8	2x 6 ø 8	2x 6 ø 8
shear force bars V3	2x 8 ø 8	2x 8 ø 8	2x 8 ø 8	2x 8 ø 8	2x 8 ø 8	2x 8 ø 8	2x 8 ø 8	2x 8 ø 8	2x 8 ø 8	2x 8 ø 8	2x 8 ø 8	-	-	-	-
shear force bars V4	-	-	2x 6 ø 10	2x 6 ø 10	2x 6 ø 10	2x 6 ø 10	2x 6 ø 10	2x 6 ø 10	2x 6 ø 10	2x 6 ø 10	2x 6 ø 10	-	-	-	-
shear force bars V5	-	-	-	-	2x 8 ø 10	2x 8 ø 10	2x 8 ø 10	2x 8 ø 10	2x 8 ø 10	2x 8 ø 10	2x 8 ø 10	-	-	-	-
applicable expansion joint distances [m]	**13,5**	**13,5**	**13,5**	**13,5**	**13,5**	**13,5**	**13,5**	**11,7**	**11,7**	**11,7**	**11,7**	**11,7**	**11,7**	**11,7**	**10,1**

concrete cover:

C30: c_o = 30 mm, c_u = 30 mm

C35: c_o = 35 mm, c_u = 30 mm

C50: c_o = 50 mm, c_u = 50 mm

Torsion of the slab in the area of the insulation joint - Egcobox® type MM±

	Egcobox type			MM20±	MM25±	MM30±	MM45±	MM50±	MM55±	MM60±	MM65±	MM70±	MM75±	MM80±	MM110±-K	MM120±-K	MM130±-K	MM150±-K
	length of element [mm]			**1000**	**1000**	**1000**	**1000**	**1000**	**1000**	**1000**	**1000**	**1000**	**1000**	**1000**	**500**	**500**	**500**	**500**
	concrete cover [mm]			**banking factor k [1/kNm]**														
	C30	**C35**	**C50**															
height of connection [mm] good bonding conditions		**160**	195	1,617	1,294	1,078	0,924	0,809	0,719	0,647	0,674	0,590	0,524	0,472	0,786	0,674	0,590	0,520
	160	165	**200**	1,439	1,151	0,959	0,822	0,719	0,639	0,575	0,598	0,523	0,465	0,418	0,697	0,598	0,523	0,460
	165	170	205	1,288	1,030	0,859	0,736	0,644	0,572	0,515	0,534	0,467	0,415	0,374	0,623	0,534	0,467	0,410
	170	175	210	1,160	0,928	0,773	0,663	0,580	0,516	0,464	0,480	0,420	0,373	0,336	0,560	0,480	0,420	0,368
	175	**180**	215	1,050	0,840	0,700	0,600	0,525	0,467	0,420	0,433	0,379	0,337	0,303	0,506	0,433	0,379	0,331
	180	185	**220**	0,955	0,764	0,637	0,546	0,478	0,425	0,382	0,393	0,344	0,306	0,275	0,459	0,393	0,344	0,300
	185	190	225	0,872	0,698	0,582	0,499	0,436	0,388	0,349	0,359	0,314	0,279	0,251	0,419	0,359	0,314	0,273
	190	195	230	0,800	0,640	0,533	0,457	0,400	0,356	0,320	0,329	0,287	0,256	0,230	0,383	0,329	0,287	0,250
	195	**200**	235	0,736	0,589	0,491	0,421	0,368	0,327	0,295	0,302	0,264	0,235	0,211	0,352	0,302	0,264	0,229
	200	205	**240**	0,680	0,544	0,453	0,389	0,340	0,302	0,272	0,278	0,244	0,217	0,195	0,325	0,278	0,244	0,211
	205	210	245	0,630	0,504	0,420	0,360	0,315	0,280	0,252	0,258	0,225	0,200	0,180	0,301	0,258	0,225	0,195
	210	215	250	0,585	0,468	0,390	0,334	0,293	0,260	0,234	0,239	0,209	0,186	0,167	0,279	0,239	0,209	0,181
	215	**220**	255	0,545	0,436	0,363	0,311	0,272	0,242	0,218	0,222	0,195	0,173	0,156	0,259	0,222	0,195	0,168
	220	225	**260**	0,509	0,407	0,339	0,291	0,254	0,226	0,203	0,207	0,181	0,161	0,145	0,242	0,207	0,181	0,157
	225	230	265	0,476	0,381	0,317	0,272	0,238	0,212	0,190	0,194	0,170	0,151	0,136	0,226	0,194	0,170	0,146
	230	235	270	0,446	0,357	0,298	0,255	0,223	0,198	0,179	0,182	0,159	0,141	0,127	0,212	0,182	0,159	0,137
	235	**240**	275	0,419	0,335	0,280	0,240	0,210	0,186	0,168	0,171	0,149	0,133	0,119	0,199	0,171	0,149	0,128
	240	245	**280**	0,395	0,316	0,263	0,226	0,197	0,175	0,158	0,160	0,140	0,125	0,112	0,187	0,160	0,140	0,121
	245	250	285	0,372	0,298	0,248	0,213	0,186	0,165	0,149	0,151	0,132	0,118	0,106	0,176	0,151	0,132	0,114
	250	255	290	0,352	0,281	0,234	0,201	0,176	0,156	0,141	0,143	0,125	0,111	0,100	0,167	0,143	0,125	0,107
	255	**260**	295	0,333	0,266	0,222	0,190	0,166	0,148	0,133	0,135	0,118	0,105	0,094	0,157	0,135	0,118	0,101
	260	265	**300**	0,315	0,252	0,210	0,180	0,158	0,140	0,126	0,128	0,112	0,099	0,089	0,149	0,128	0,112	0,096
	265	270		0,299	0,239	0,199	0,171	0,150	0,133	0,120	0,121	0,106	0,094	0,085	0,141	0,121	0,106	0,091
	270	275		0,284	0,227	0,189	0,162	0,142	0,126	0,114	0,115	0,101	0,090	0,081	0,134	0,115	0,101	0,086
	275	**280**		0,270	0,216	0,180	0,154	0,135	0,120	0,108	0,109	0,096	0,085	0,077	0,128	0,109	0,096	0,082
	280	285		0,258	0,206	0,172	0,147	0,129	0,114	0,103	0,104	0,091	0,081	0,073	0,122	0,104	0,091	0,078
	285	290		0,246	0,196	0,164	0,140	0,123	0,109	0,098	0,099	0,087	0,077	0,070	0,116	0,099	0,087	0,074
	290	295		0,234	0,188	0,156	0,134	0,117	0,104	0,094	0,095	0,083	0,074	0,066	0,111	0,095	0,083	0,071
	295	**300**		0,224	0,179	0,149	0,128	0,112	0,100	0,090	0,091	0,079	0,070	0,063	0,106	0,091	0,079	0,068
	300			0,214	0,171	0,143	0,122	0,107	0,095	0,086	0,087	0,076	0,067	0,061	0,101	0,087	0,076	0,065

Rotation spring stiffness Egcobox® type MM±

	Egcobox type			MM20±	MM25±	MM30±	MM45±	MM50±	MM55±	MM60±	MM65±	MM70±	MM75±	MM80±	MM110±-K	MM120±-K	MM130±-K	MM150±-K
	length of element [mm]			1000	1000	1000	1000	1000	1000	1000	1000	1000	1000	1000	500	500	500	500
	concrete cover [mm]			Rotation spring stiffness [kNm/rad/Element]														
	C30	C35	C50															
height of connection [mm] good bonding conditions		**160**	195	618	773	928	1082	1237	1391	1546	1484	1696	1908	2120	1272	1484	1696	1921
	160	165	**200**	695	869	1043	1216	1390	1564	1738	1673	1912	2151	2390	1434	1673	1912	2172
	165	170	205	776	970	1164	1359	1553	1747	1941	1873	2141	2408	2676	1606	1873	2141	2439
	170	175	210	862	1078	1293	1509	1724	1940	2155	2085	2382	2680	2978	1787	2085	2382	2720
	175	**180**	215	952	1190	1428	1666	1905	2143	2381	2307	2637	2967	3296	1978	2307	2637	3017
	180	185	**220**	1047	1309	1570	1832	2094	2356	2617	2542	2905	3268	3631	2178	2542	2905	3330
	185	190	225	1146	1433	1719	2006	2292	2579	2865	2787	3185	3583	3981	2389	2787	3185	3658
	190	195	230	1250	1562	1875	2187	2500	2812	3125	3044	3478	3913	4348	2609	3044	3478	4001
	195	**200**	235	1358	1697	2037	2376	2716	3055	3395	3312	3785	4258	4731	2839	3312	3785	4360
	200	205	**240**	1471	1838	2206	2574	2941	3309	3677	3591	4104	4617	5130	3078	3591	4104	4734
	205	210	245	1588	1985	2382	2779	3176	3572	3969	3882	4436	4991	5545	3327	3882	4436	5123
	210	215	250	1709	2137	2564	2991	3419	3846	4273	4184	4781	5379	5977	3586	4184	4781	5528
	215	**220**	255	1835	2294	2753	3212	3671	4130	4589	4497	5139	5782	6424	3855	4497	5139	5948
	220	225	**260**	1966	2458	2949	3441	3932	4424	4915	4822	5510	6199	6888	4133	4822	5510	6384
	225	230	265	2101	2626	3152	3677	4202	4728	5253	5157	5894	6631	7368	4421	5157	5894	6835
	230	235	270	2241	2801	3361	3921	4482	5042	5602	5505	6291	7077	7864	4718	5505	6291	7302
	235	**240**	275	2385	2981	3577	4173	4770	5366	5962	5863	6701	7538	8376	5026	5863	6701	7783
	240	245	**280**	2533	3167	3800	4433	5067	5700	6333	6233	7123	8014	8904	5343	6233	7123	8281
	245	250	285	2686	3358	4030	4701	5373	6044	6716	6614	7559	8504	9449	5669	6614	7559	8793
	250	255	290	2844	3555	4266	4977	5688	6399	7110	7007	8008	9008	10009	6006	7007	8008	9321
	255	**260**	295	3006	3757	4509	5260	6012	6763	7515	7410	8469	9528	10586	6352	7410	8469	9865
	260	265	**300**	3172	3966	4759	5552	6345	7138	7931	7825	8943	10061	11179	6708	7825	8943	10423
	265	270		3343	4179	5015	5851	6687	7523	8359	8252	9431	10609	11788	7073	8252	9431	10998
	270	275		3519	4399	5278	6158	7038	7918	8797	8689	9931	11172	12414	7448	8689	9931	11587
	275	**280**		3699	4624	5548	6473	7398	8323	9247	9138	10444	11749	13055	7833	9138	10444	12192
	280	285		3883	4854	5825	6796	7767	8738	9708	9599	10970	12341	13713	8228	9599	10970	12813
	285	290		4072	5090	6108	7127	8145	9163	10181	10070	11509	12948	14386	8632	10070	11509	13448
	290	295		4266	5332	6399	7465	8531	9598	10664	10553	12061	13569	15076	9046	10553	12061	14099
	295	**300**		4464	5580	6695	7811	8927	10043	11159	11048	12626	14204	15782	9469	11048	12626	14766
	300			4666	5833	6999	8166	9332	10499	11665	11553	13204	14854	16504	9903	11553	13204	15448

On-site reinforcement Egcobox® type MM± - C25/30

Egcobox type	MM20±	MM25±	MM30±	MM45±	MM50±	MM55±	MM60±	MM65±	MM70±	MM75±	MM80±	MM110±-K	MM120±-K	MM130±-K	MM150±-K
length of element [mm]	**1000**	**1000**	**1000**	**1000**	**1000**	**1000**	**1000**	**1000**	**1000**	**1000**	**1000**	**500**	**500**	**500**	**500**
Egcobox ø rebar [mm]	ø 12	ø 12	ø 12	ø 12	ø 12	ø 12	ø 12	ø 14	ø 14	ø 14	ø 14	ø 14	ø 14	ø 14	ø 16
Egcobox l_0 rebar [mm]	580	580	580	580	580	580	580	720	720	720	720	720	720	720	1190
item ① - lapping reinforcement / element															
≥ a_s [cm²] B500	4,16	5,20	6,24	7,28	8,32	9,36	10,40	10,73	12,26	13,79	15,32	9,19	10,35	11,18	14,07
suggested on-site reinforcement [mm]	ø 12	ø 12	ø 12	ø 12	ø 12	ø 12	ø 12	ø 14	ø 14	ø 14	ø 14	ø 14	ø 14	ø 14	ø 16
item ② - suspension reinforcement shear force / element															
shear force level VS ≥ a_s [cm²] B500	1,12	1,12	1,12	1,12	1,12	1,12	1,12	1,12	1,12	1,12	1,12	1,12	1,12	1,12	1,12
shear force level V1 ≥ a_s [cm²] B500	1,99	1,99	1,99	1,99	1,99	1,99	1,99	1,99	1,99	1,99	1,99	1,99	1,99	1,99	1,99
shear force level V2 ≥ a_s [cm²] B500	2,99	2,99	2,99	2,99	2,99	2,99	2,99	2,99	2,99	2,99	2,99	2,99	2,99	2,99	2,99
shear force level V3 ≥ a_s [cm²] B500	3,98	3,98	3,98	3,98	3,98	3,98	3,98	3,98	3,98	3,98	3,98	-	-	-	-
shear force level V4 ≥ a_s [cm²] B500	-	-	4,67	4,67	4,67	4,67	4,67	4,67	4,67	4,67	4,67	-	-	-	-
shear force level V5 ≥ a_s [cm²] B500	-	-	-	-	6,22	6,22	6,22	6,22	6,22	6,22	6,22	-	-	-	-

item ③+④ - structural reinforcement
In the slab edge of the u-bar reinforcement is respectively to arrange ≥ ø8 (item ③).
On the balcony side, it is recommended to design the edge reinforcement for the shear force V_{Ed} / f_{yd} ≥ ø6/250 mm according to EN 1992 (item ④ - vs. item ②).

Depending on the moment load (negative or positive moment), the overlap of the bending tension reinforcement (item ①) can only be sufficient in the top or lower layer.
The suggested lapping reinforcement (α_6=1,5) is selected (item ①) to transfer 100% of the M_{Rd} of the Egcobox® (height Egcobox® = height floor). An other reinforcement selection is possible.
In case of an other reinforcement selection shall be approved the lapping reinforcement in accordance with EN 1992. The reinforcement cross section or the lapping length can be derated in reference of utilization proportional M_{Ed} / M_{Rd}.
The lapping reinforcement must be approved by the structural engineer.

The proposed steel cross-section a_s (item ②) covers the maximum design transverse force V_{Rd} of the Egcobox®. In case of smaller actions, the edge reinforcement may be determined with V_{Ed} / f_{yd} ≥ ø6/250 mm.

The specifications apply to good bonding conditions.

design proposal

direct support

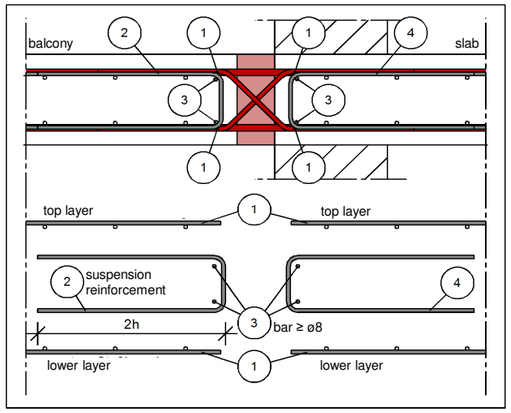

indirect support

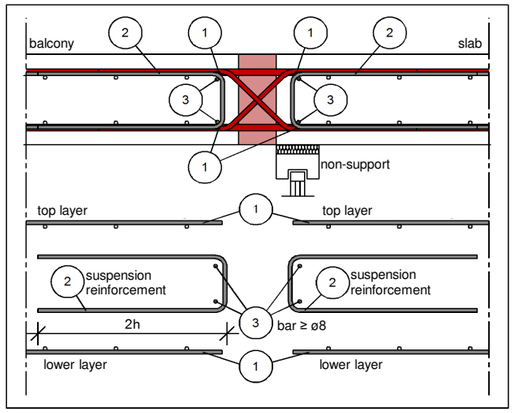

Design table Egcobox® type VM - C25/30

for supported plates for the transmission of shear forces, insulation 80 mm

Egcobox type			VM48	VM61	VM86	VM108	VM130	VM173	VM216	VM259	VM333	VM399
length of element [mm]			**1000**	**1000**	**1000**	**1000**	**1000**	**1000**	**1000**	**1000**	**1000**	**1000**
concrete cover [mm]			V_{Rd} [kN/element]									
C30	**C35**	**C50**										
height of connection [mm] good bonding conditions												
160-170	160-175	175-190	48,7	60,8	86,5	108,2	129,8	173,1	-	-	-	-
175-190	180-195	195-210							216,3	259,6	-	-
195-300	200-300	215-300	48,7	60,8	86,5	108,2	129,8	173,1	216,3	259,6	333,1	399,7

Reinforcement										
shear force bars	4 ø 6	5 ø 6	4 ø 8	5 ø 8	6 ø 8	8 ø 8	10 ø 8	12 ø 8	10 ø 10	12 ø 10
minimum wall / beam width [mm]	180	180	200	200	200	200	200	200	220	220
compression bearings	4 ø 12	4 ø 12	4 ø 12	4 ø 12	4 ø 12	4 ø 12	4 ø 12	4 ø 12	5 ø 12	6 ø 12
applicable expansion joint distances [m]	**11,7**	**11,7**	**11,7**	**11,7**	**11,7**	**11,7**	**11,7**	**11,7**	**11,7**	**11,7**

Design table Egcobox® type VM-K - C25/30

for supported plates for the transmission of shear forces, insulation 80 mm

Egcobox type			VM24-K	VM43-K	VM65-K	VM86-K	VM108-K	VM130-K	VM151-K	VM200-K
length of element [mm]			**200**	**250**	**250**	**300**	**400**	**400**	**500**	**500**
concrete cover [mm]			V_{Rd} [kN/element]							
C30	**C35**	**C50**								
height of connection [mm] good bonding conditions										
160-170	160-175	175-190	24,3	43,3	64,9	86,5	108,2	-	151,4	-
175-190	180-195	195-210						133,2		199,4
195-300	200-300	215-300	24,3	43,3	64,9	86,5	108,2	133,2	151,4	199,4

Reinforcement								
shear force bars	2 ø 6	2 ø 8	3 ø 8	4 ø 8	5 ø 8	4 ø 10	7 ø 8	6 ø 10
minimum wall / beam width [mm]	180	200	200	200	200	220	200	220
compression bearings	1 ø 12	1 ø 12	1 ø 12	2 ø 12	2 ø 12	2 ø 12	3 ø 12	3 ø 12
applicable expansion joint distances [m]	**11,7**	**11,7**	**11,7**	**11,7**	**11,7**	**11,7**	**11,7**	**11,7**

On-site reinforcement Egcobox® type VM / VM-K - C25/30

Egcobox type	VM48	VM61	VM86	VM108	VM130	VM173	VM216	VM259	VM333	VM399
length of element [mm]	**1000**	**1000**	**1000**	**1000**	**1000**	**1000**	**1000**	**1000**	**1000**	**1000**
item ② - suspension reinforcement side shear force / element										
≥ a_s [cm²] B500	1,12	1,40	1,99	2,49	2,99	3,98	4,98	5,97	7,78	9,33
x = shear force bar embedment depth (slab) [mm]	155	155	175	175	175	175	175	175	195	195

Egcobox type	VM24-K	VM43-K	VM65-K	VM86-K	VM108-K	VM130-K	VM151-K	VM200-K
length of element [mm]	**200**	**250**	**250**	**300**	**400**	**400**	**500**	**500**
item ② - suspension reinforcement side shear force / element								
≥ a_s [cm²] B500	0,56	1,00	1,49	1,99	2,49	3,11	3,48	4,67
x = shear force bar embedment depth (slab) [mm]	155	175	175	175	175	195	175	195

item ③+④+⑤ - structural reinforcement
In the slab edge of the u-bar reinforcement is respectively to arrange ≥ ø8 (item ③).
On the balcony side, it is recommended to design the edge reinforcement for the shear force V_{Ed} / f_{yd} ≥ ø6/250 mm according to EN 1992 (item ④ - vs. item ②); on the floor side, an edge beam (item ⑤) ≥ ø6/250 is to be provided.

The proposed steel cross-section a_s The proposed steel cross-section as covers the maximum design transverse force V_{Rd} of the Egcobox®. In case of smaller actions, the edge reinforcement may be determined with V_{Ed} / f_{yd} ≥ ø6/250 mm.

The specifications apply to good bonding conditions.

design proposal

direct support

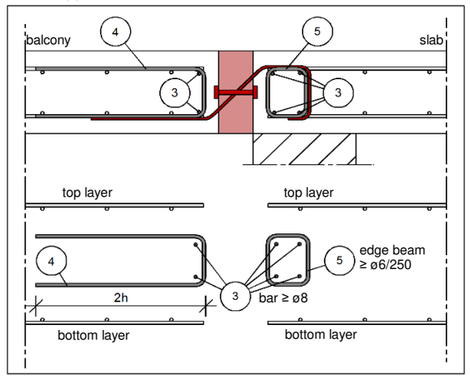

direct support (semi-prefab slab)

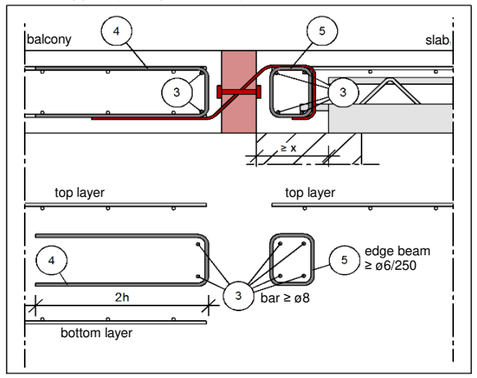

direct support: Egcobox in semi-prefab balcony

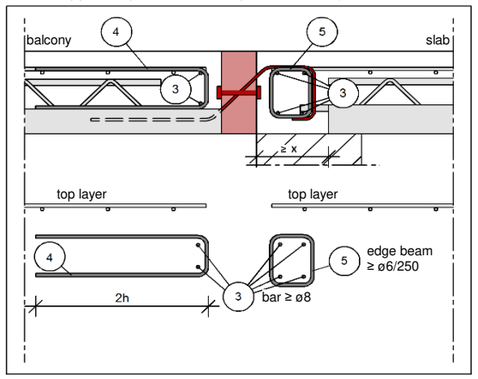

indirect support

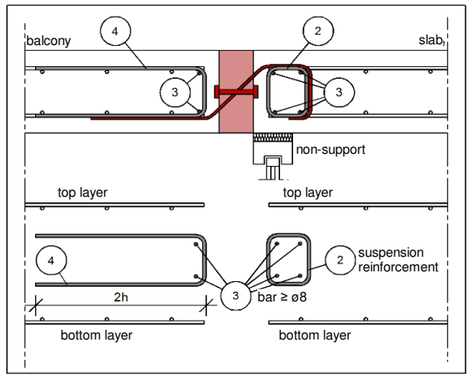

indirect support (semi-prefab slab)

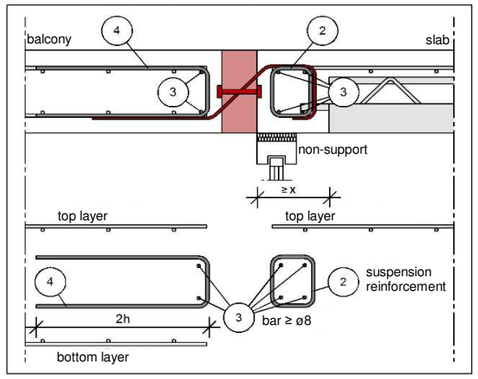

Note Egcobox in semi-prefab balcony:
It is advisable to include the constructive edging on the balcony side (item ④ vs. item ②) in the semi-prefab part.

Note indirect support (semi-prefab slab):
The information on the minimum required connection reinforcement of the Egcobox of the ceiling-side item ② does not replace the statically selected beam reinforcement of the structural engineer. This has to be considered additionally. The Pos ③ on the ceiling side, however, is only constructive and can be taken into account for the static specifications of the structural engineer.

Design table Egcobox® type VM± - C25/30

for supported plates for transmission of positive and negative shear forces, insulation 80 mm

Egcobox type			VM48±	VM61±	VM86±	VM108±	VM130±	VM173±	VM216±	VM259±	VM333±	VM399±
length of element [mm]			1000	1000	1000	1000	1000	1000	1000	1000	1000	1000
concrete cover [mm]			V_{Rd} [kN/element]									
C30	C35	C50										
height of connection [mm] good bonding conditions												
160-170	160-175	175-190	±48,7	±60,8	±86,5	±108,2	±129,8	±173,1	-	-	-	-
175-190	180-195	195-210							±216,3	±259,6	-	-
195-300	200-300	215-300	±48,7	±60,8	±86,5	±108,2	±129,8	±173,1	±216,3	±259,6	±333,1	±399,7

Reinforcement										
shear force bars	2x 4 ø 6	2x 5 ø 6	2x 4 ø 8	2x 5 ø 8	2x 6 ø 8	2x 8 ø 8	2x 10 ø 8	2x 12 ø 8	2x 10 ø 10	2x 12 ø 10
minimum wall / beam width [mm]	180	180	200	200	200	200	200	200	220	220
compression bearings	4 ø 12	4 ø 12	4 ø 12	4 ø 12	4 ø 12	4 ø 12	4 ø 12	4 ø 12	5 ø 12	6 ø 12
applicable expansion joint distances [m]	**11,7**	**11,7**	**11,7**	**11,7**	**11,7**	**11,7**	**11,7**	**11,7**	**11,7**	**11,7**

Design table Egcobox® type VM-K± - C25/30

for supported plates for transmission of positive and negative shear forces, insulation 80 mm

Egcobox type			VM24-K±	VM43-K±	VM65-K±	VM86-K±	VM108-K±	VM130-K±	VM151-K±	VM200-K±
length of element [mm]			200	250	250	310	400	400	500	520
concrete cover [mm]			V_{Rd} [kN/element]							
C30	C35	C50								
height of connection [mm] good bonding conditions										
160-170	160-175	175-190	±24,3	±43,3	±64,9	±86,5	±108,2	-	±151,4	-
175-190	180-195	195-210						±133,2		±199,9
195-300	200-300	215-300	±24,3	±43,3	±64,9	±86,5	±108,2	±133,2	±151,4	±199,9

Reinforcement								
shear force bars	2x 2 ø 6	2x 2 ø 8	2x 3 ø 8	2x 4 ø 8	2x 5 ø 8	2x 4 ø 10	2x 7 ø 8	2x 6 ø 10
minimum wall / beam width [mm]	180	200	200	200	200	220	200	220
compression bearings	1 ø 12	1 ø 12	1 ø 12	2 ø 12	2 ø 12	2 ø 12	3 ø 12	3 ø 12
applicable expansion joint distances [m]	**11,7**	**11,7**	**11,7**	**11,7**	**11,7**	**11,7**	**11,7**	**11,7**

On-site reinforcement Egcobox® type VM± / VM-K± - C25/30

Egcobox type	VM48±	VM61±	VM86±	VM108±	VM130±	VM173±	VM216±	VM259±	VM333±	VM399±
length of element [mm]	**1000**	**1000**	**1000**	**1000**	**1000**	**1000**	**1000**	**1000**	**1000**	**1000**
item ② - suspension reinforcement side shear force / element										
≥ a_s [cm²] B500	1,12	1,40	1,99	2,49	2,99	3,98	4,98	5,97	7,78	9,33
x = shear force bar embedment depth (slab) [mm]	155	155	175	175	175	175	175	175	195	195

Egcobox type	VM24-K±	VM43-K±	VM65-K±	VM86-K±	VM108-K±	VM130-K±	VM151-K±	VM200-K±
length of element [mm]	**200**	**250**	**250**	**310**	**400**	**400**	**500**	**520**
item ② - suspension reinforcement shear force / element								
≥ a_s [cm²] B500	0,56	1,00	1,49	1,99	2,49	3,11	3,48	4,67
x = shear force bar embedment depth (slab) [mm]	155	175	175	175	175	195	175	195

item ③+④ - structural reinforcement
In the slab edge of the u-bar reinforcement is respectively to arrange ≥ ø8 (item ③).
On the balcony side, it is recommended to design the edge reinforcement for the shear force V_{Ed} / f_{yd} ≥ ø6/250 mm according to EN 1992 (item ④ - vs. item ②); on the floor side, an edge beam (item ⑤) ≥ ø6/250 is to be provided.

The proposed steel cross-section a_s The proposed steel cross-section as covers the maximum design transverse force V_{Rd} of the Egcobox®. In case of smaller actions, the edge reinforcement may be determined with V_{Ed} / f_{yd} ≥ ø6/250 mm.

The specifications apply to good bonding conditions.

design proposal

direct support

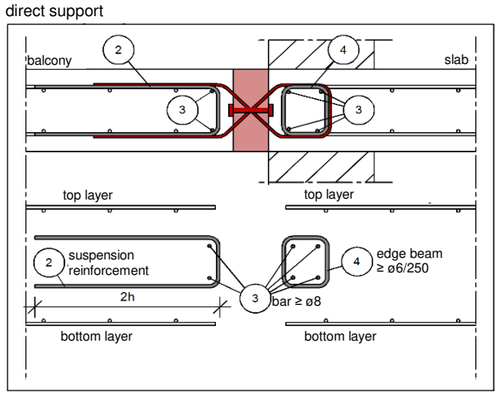

direct support (semi-prefab slab)

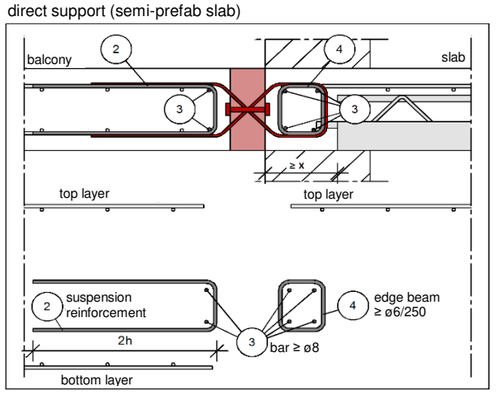

direct support: Egcobox in semi-prefab balcony

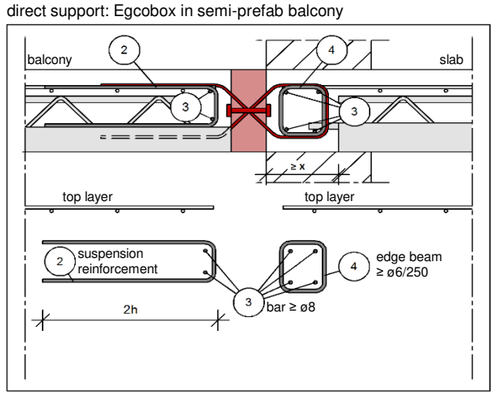

indirect support

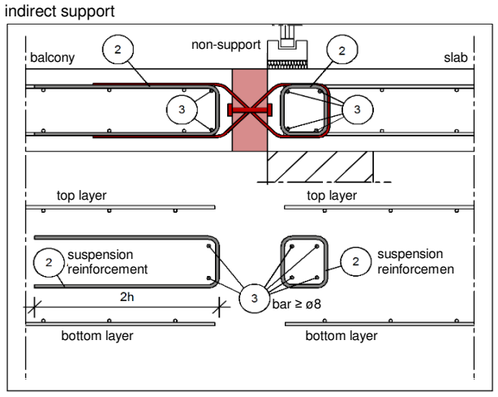

indirect support (semi-prefab slab)

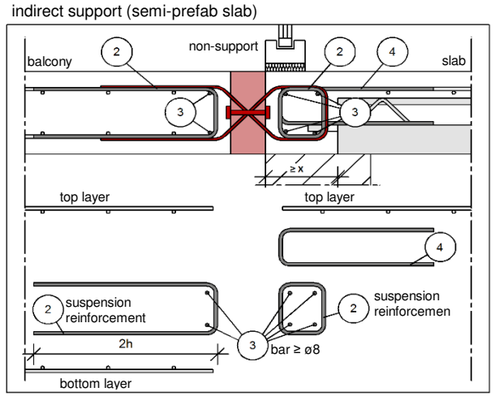

Note Egcobox in semi-prefab balcony:
It is advisable to include the constructive edging on the balcony side (item ④ vs. item ②) in the semi-prefab part.

Note indirect support (semi-prefab slab):
The information on the minimum required connection reinforcement of the Egcobox of the ceiling-side item ② does not replace the statically selected beam reinforcement of the structural engineer. This has to be considered additionally. The Pos ③ on the ceiling side, however, is only constructive and can be taken into account for the static specifications of the structural engineer.

Design table Egcobox® type VM Z - C25/30

for zero-stress connection of loggias for the transmission of shear forces, insulation 80 mm

Egcobox type			VM Z 48	VM Z 61	VM Z 86	VM Z 108	VM Z 130	VM Z 173	VM Z 216	VM Z 259	VM Z 333	VM Z 399
length of element [mm]			**1000**	**1000**	**1000**	**1000**	**1000**	**1000**	**1000**	**1000**	**1000**	**1000**
concrete cover [mm]												
C30	**C35**	**C50**					**V_{Rd} [kN/element]**					
height of connection [mm] good bonding conditions												
160-170	160-175	175-190	48,7	60,8	86,5	108,2	129,8	173,1	-	-	-	-
175-190	180-195	195-210							216,3	259,6	-	-
195-300	200-300	215-300	48,7	60,8	86,5	108,2	129,8	173,1	216,3	259,6	333,1	399,7

Reinforcement										
shear force bars	4 ø 6	5 ø 6	4 ø 8	5 ø 8	6 ø 8	8 ø 8	10 ø 8	12 ø 8	10 ø 10	12 ø 10
minimum wall / beam width [mm]	180	180	200	200	200	200	200	200	220	220
applicable expansion joint distances [m]	13,5	13,5	13,5	13,5	13,5	13,5	13,5	13,5	13,5	13,5
span between elements [m]	**11,7**	**11,7**	**11,7**	**11,7**	**11,7**	**11,7**	**11,7**	**11,7**	**11,7**	**11,7**

Also available as VM Z± version on request.

Design table Egcobox® type VM Z -K - C25/30

for zero-stress connection of loggias for the transmission of shear forces, insulation 80 mm

Egcobox type			VM Z 24-K	VM Z 43-K	VM Z 65-K	VM Z 86-K	VM Z 108-K	VM Z 130-K	VM Z 151-K	VM Z 200-K
length of element [mm]			**200**	**250**	**250**	**300**	**400**	**400**	**500**	**500**
concrete cover [mm]										
C30	**C35**	**C50**					**V_{Rd} [kN/element]**			
height of connection [mm] good bonding conditions										
160-170	160-175	175-190	24,3	43,3	64,9	86,5	108,2	-	151,4	-
175-190	180-195	195-210						133,2		199,9
195-300	200-300	215-300	24,3	43,3	64,9	86,5	108,2	133,2	151,4	199,9

Reinforcement								
shear force bars	2 ø 6	2 ø 8	3 ø 8	4 ø 8	5 ø 8	4 ø 10	7 ø 8	6 ø 10
minimum wall / beam width [mm]	180	200	200	200	200	220	200	220
applicable expansion joint distances [m]	13,5	13,5	13,5	13,5	13,5	13,5	13,5	13,5
span between elements [m]	**5,85**	**5,85**	**5,85**	**5,85**	**5,85**	**5,85**	**5,85**	**5,85**

Also available as VM Z-K± version on request.

The Egcobox VM Z or VM Z-K is to be used opposite each other in combination with the Egcobox VM or VM-K of the same bearing stage or an opposite bending resistant support.

On-site reinforcement Egcobox® type VM Z / VM Z -K - C25/30

Egcobox type	VM Z 48	VM Z 61	VM Z 86	VM Z 108	VM Z 130	VM Z 173	VM Z 216	VM Z 259	VM Z 333	VM Z 399
length of element [mm]	**1000**	**1000**	**1000**	**1000**	**1000**	**1000**	**1000**	**1000**	**1000**	**1000**
in combination with	VM48	VM61	VM86	VM108	VM130	VM173	VM216	VM259	VM333	VM399
	or an opposite bending resistant support									
item ② - suspension reinforcement side shear force / element										
≥ a_s [cm²] B500	1,12	1,40	1,99	2,49	2,99	3,98	4,98	5,97	7,78	9,33
x = shear force bar embedment depth (slab) [mm]	155	155	175	175	175	175	175	175	195	195
item ⑤ - tie member (add. reinforcement) in the loggia for transmitting the horizontal tension forces from the Egcobox VM to VM Z										
≥ as [cm²] B500	1,12	1,40	1,99	2,49	2,99	3,98	4,98	5,97	7,78	9,33
item ⑥ - max. required add. reinforcement (tension) in the connection area of the Egcobox VM in case of e.g. asymmetrical loads on the loggia										
≥ a_s [cm²] B500	0,39	0,49	0,70	0,87	1,04	1,39	1,74	2,09	2,72	3,27

Egcobox type	VM Z 24-K	VM Z 43-K	VM Z 65-K	VM Z 86-K	VM Z 108-K	VM Z 130-K	VM Z 151-K	VM Z 200-K
length of element [mm]	**200**	**250**	**250**	**300**	**400**	**400**	**500**	**500**
in combination with	VM24-K	VM43-K	VM65-K	VM86-K	VM108-K	VM130-K	VM151-K	VM200-K
	or an opposite bending resistant support							
item ② - suspension reinforcement side shear force / element								
≥ a_s [cm²] B500	0,56	1,00	1,49	1,99	2,49	3,11	3,48	4,67
x = shear force bar embedment depth (slab) [mm]	155	175	175	175	175	195	175	195
item ⑤ - tie member (add. reinforcement) in the loggia for transmitting the horizontal tension forces from the Egcobox VM-K to VM Z-K								
≥ as [cm²] B500	0,56	1,00	1,49	1,99	2,49	3,11	3,48	4,67
item ⑥ - max. required add. reinforcement (tension) in the connection area of the Egcobox VM-K in case of e.g. asymmetrical loads on the loggia								
≥ a_s [cm²] B500	0,20	0,35	0,52	0,70	0,87	1,09	1,22	1,63

item ③+④ - structural reinforcement
In the slab edge of the u-bar reinforcement is respectively to arrange ≥ ø8 (item ③).
On the balcony side, it is recommended to design the edge reinforcement for the shear force V_{Ed} / f_{yd} ≥ ø6/250 mm according to EN 1992 (item ④ - vs. item ②); on the floor side, an edge beam (item ⑤) ≥ ø6/250 is to be provided.

The proposed steel cross-section a_s The proposed steel cross-section as covers the maximum design transverse force V_{Rd} of the Egcobox®. In case of smaller actions, the edge reinforcement may be determined with V_{Ed} / f_{yd} ≥ ø6/250 mm.

item ⑤+⑥ - additional reinforcement
When planning zero-stress elements, care must be taken to ensure that the resulting tensile forces are absorbed in the lower reinforcement layer of the loggia by a tie member (item ⑤).
At maximum design shear force V_{Rd} of Egcobox®, the reinforcement cross-section of the tension member should correspond to the transverse force bars.
In addition, additional tension forces may occur, e.g. due to asymmetrical loading of the balcony plate. These can be absorbed by arranging Egcobox® Short-Elements (modules) or by additional tension rods (V4A) in the Egcobox VM_ or VM_-K.
The proposed steel cross-section a_s The proposed steel cross-section (item ⑥) as covers the maximum design transverse force V_{Rd} of the Egcobox®. In case of smaller actions, the edge reinforcement may be determined with V_{Ed} / f_{yd} ≥ ø6/250 mm.

The specifications apply to good bonding conditions.

design proposal

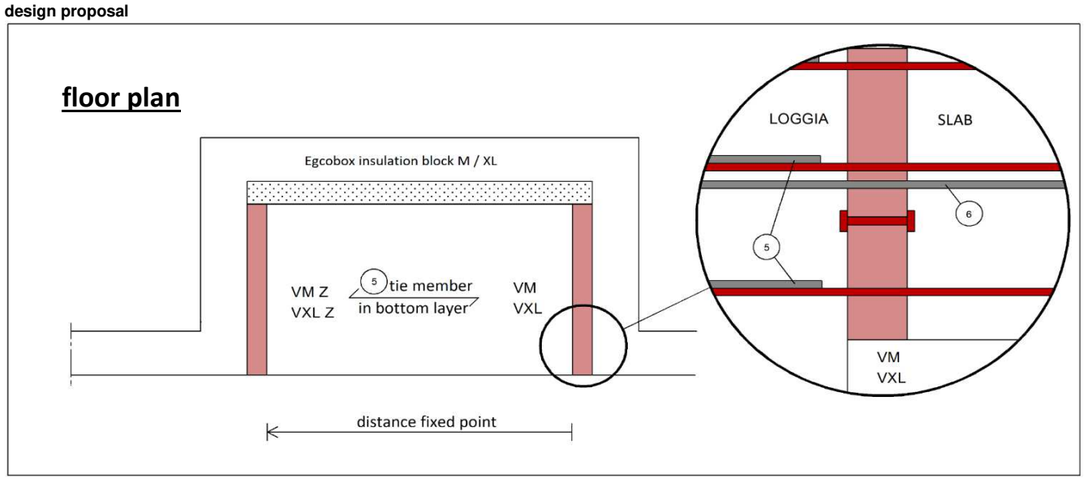

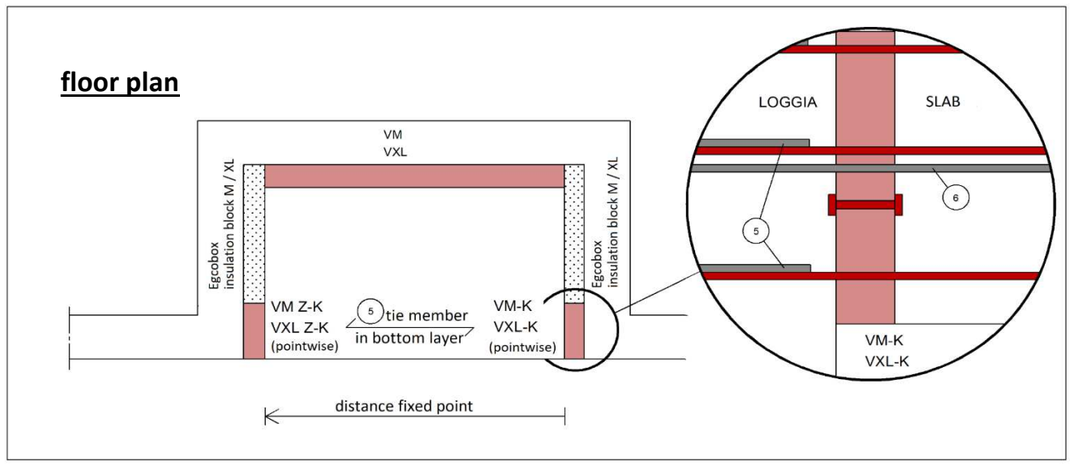

direct support

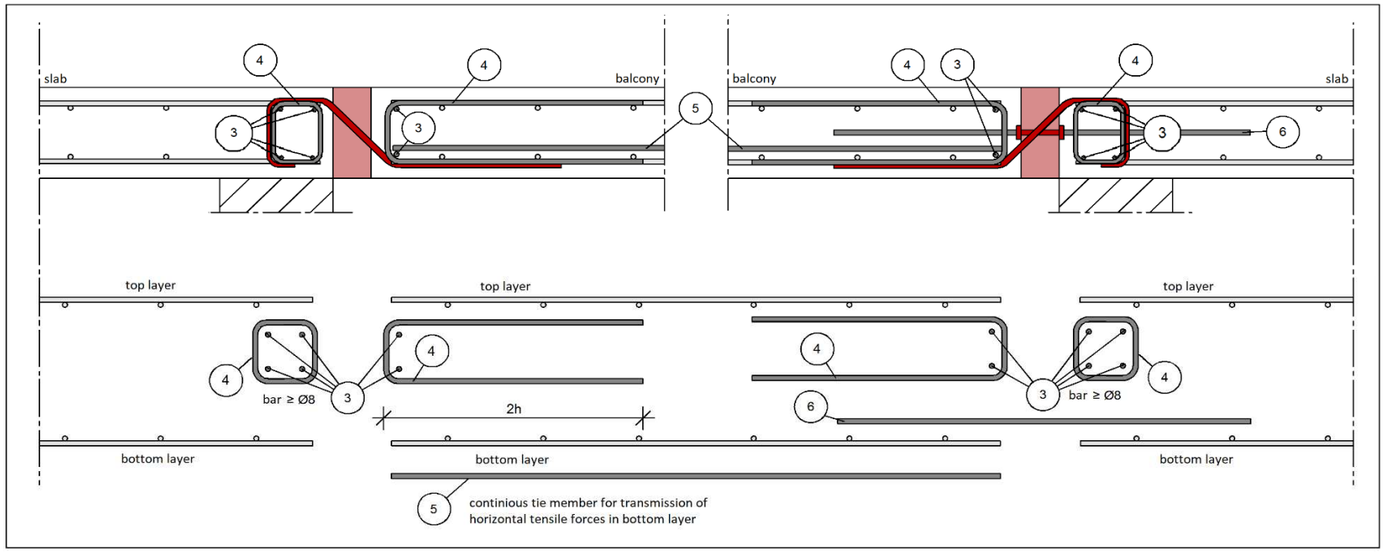

indirect support

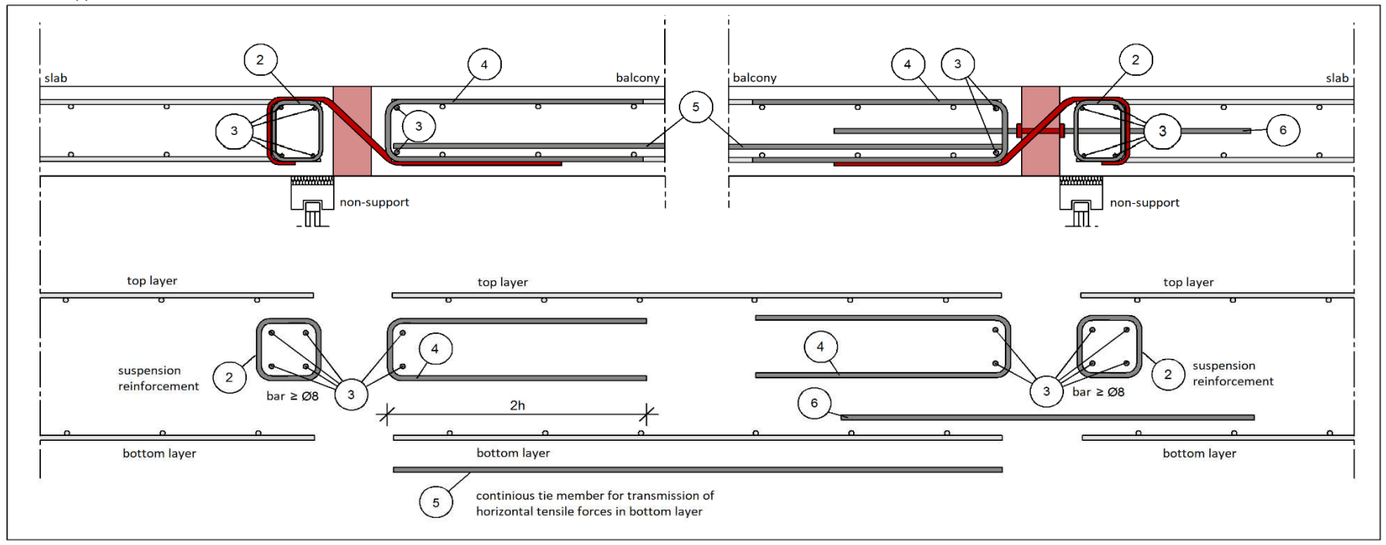

Egcobox® type VM, VM±, VM-K, VM-K± - C25/30

Moments from eccentric connection

When using the Egcobox® V... for the transmission of shear force requirements only, a moment from eccentric connection has to be considered additionally when dimensioning the connection reinforcement.
The moment ΔM_{Ed} is determined under the assumption of a shear force utilisation of 100%.

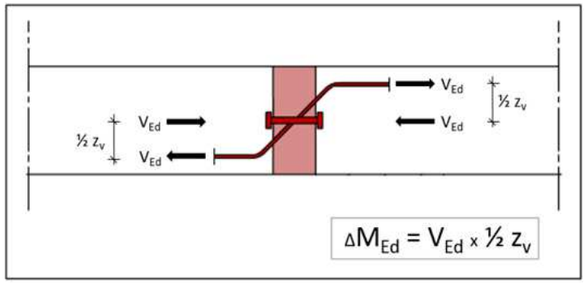

Egcobox type			VM48 VM48±	VM61 VM61±	VM86 VM86±	VM108 VM108±	VM130 VM130±	VM173 VM173±	VM216 VM216±	VM259 VM259±	VM333 VM333±	VM399 VM399±
length of element [mm]			1000	1000	1000	1000	1000	1000	1000	1000	1000	1000
concrete cover [mm]			ΔM_{Ed} [kNm/element] for height of connectionn									
C30	C35	C50										
height of connection [mm] good bonding conditions												
160-170	160-175	175-190	3,2	4,0	5,8	7,2	8,6	11,5	-	-	-	-
175-190	180-195	195-210	3,9	4,9	7,0	8,7	10,4	13,9	17,4	20,9	-	-
195-225	200-230	215-245	4,6	5,8	8,2	10,2	12,3	16,4	20,4	24,5	31,5	37,8
230-260	235-265	250-280	5,8	7,2	10,3	12,9	15,4	20,6	25,7	30,9	39,6	47,6
265-300	270-300	285-300	8,2	10,2	14,5	18,2	21,8	29,1	36,3	43,6	56,0	67,2

Egcobox type			VM24-K VM24-K±	VM43-K VM43-K±	VM65-K VM65-K±	VM86-K VM86-K±	VM108-K VM108-K±	VM130-K VM130-K±	VM151-K VM151-K±	VM200-K VM200-K±
length of element [mm]			200	250	250	300 310	400	400	500	500 520
concrete cover [mm]			ΔM_{Ed} [kNm/element] for height of connection							
C30	C35	C50								
height of connection [mm] good bonding conditions										
160-170	160-175	175-190	1,6	2,9	4,3	5,8	7,2	-	10,1	-
175-190	180-195	195-210	2,0	3,5	5,2	7,0	8,7	10,7	12,2	16,1
195-225	200-230	215-245	2,3	4,1	6,1	8,2	10,2	12,6	14,3	18,8
230-260	235-265	250-280	2,9	5,1	7,7	10,3	12,9	15,9	18,0	23,7
265-300	270-300	285-300	4,1	7,3	10,9	14,5	18,2	22,4	25,4	33,5

Design table Egcobox® type AM

for parapet wall, insulation 80 mm

Egcobox type	AM10-140	AM10-150	AM10-200	AM20-140	AM20-150	AM20-200	AM30-140	AM30-150	AM30-200
length of element [mm]	250			250			250		
height of element [mm]	140 - 250			140 - 250			140 - 250		
width of parapet wall [mm]	140	150 - 190	200 - 250	140	150 - 190	200 - 250	140	150 - 190	200 - 250

concrete strength	N_{Rd} [kN/element] I M_{Rd} [kNm/element]																	
	$N_{R,d}$	$M_{R,d}$	$N_{R,d}$	$M_{R,d}$	$N_{R,d}$	$M_{R,d}$	$N_{R,d}$	$M_{R,d}$	$N_{R,d}$	$M_{R,d}$	$N_{R,d}$	$M_{R,d}$	$N_{R,d}$	$M_{R,d}$	$N_{R,d}$	$M_{R,d}$	$N_{R,d}$	$M_{R,d}$
C20/25 parapet wall C20/25 slab C20/25	0,0	± 2,39	0,0	± 2,69	0,0	± 3,05	0,0	± 3,83	0,0	± 4,70	0,0	± 6,50	0,0	± 3,83	0,0	± 4,70	0,0	± 6,50
	10,0	± 1,99	10,0	± 2,24	10,0	± 2,43	10,0	± 3,43	10,0	± 4,25	10,0	± 5,85	10,0	± 3,43	10,0	± 4,25	10,0	± 5,85
	20,0	± 1,59	20,0	± 1,79	20,0	± 1,82	20,0	± 3,03	20,0	± 3,80	20,0	± 5,20	20,0	± 3,03	20,0	± 3,80	20,0	± 5,20
	30,0	± 1,19	30,0	± 1,34	30,0	± 1,20	30,0	± 2,63	30,0	± 3,35	30,0	± 4,55	30,0	± 2,63	30,0	± 3,35	30,0	± 4,55
	40,0	± 0,79	40,0	± 0,89	40,0	± 0,59	40,0	± 2,23	40,0	± 2,90	40,0	± 3,90	40,0	± 2,23	40,0	± 2,90	40,0	± 3,90
	50,0	± 0,39	50,0	± 0,44	49,6	± 0,00	50,0	± 1,83	50,0	± 2,45	50,0	± 3,25	50,0	± 1,83	50,0	± 2,45	50,0	± 3,25
	60,0	± 0,00	59,8	± 0,00	-	-	60,0	± 1,43	60,0	± 2,00	60,0	± 2,60	60,0	± 1,43	60,0	± 2,00	60,0	± 2,60
	V_{Rd} [kN/element]																	
	± 4,84		± 5,31		± 6,87		± 5,89		± 6,46		± 8,36		± 11,78		± 12,92		± 16,71	

concrete strength	N_{Rd} [kN/element] I M_{Rd} [kNm/element]																	
	$N_{R,d}$	$M_{R,d}$	$N_{R,d}$	$M_{R,d}$	$N_{R,d}$	$M_{R,d}$	$N_{R,d}$	$M_{R,d}$	$N_{R,d}$	$M_{R,d}$	$N_{R,d}$	$M_{R,d}$	$N_{R,d}$	$M_{R,d}$	$N_{R,d}$	$M_{R,d}$	$N_{R,d}$	$M_{R,d}$
C25/30 parapet wall C25/30 slab ≥C20/25	0,0	± 2,40	0,0	± 3,12	0,0	± 3,18	0,0	± 3,83	0,0	± 4,70	0,0	± 6,91	0,0	± 3,83	0,0	± 4,70	0,0	± 6,91
	10,0	± 2,05	10,0	± 2,67	10,0	± 2,62	10,0	± 3,43	10,0	± 4,25	10,0	± 6,28	10,0	± 3,43	10,0	± 4,25	10,0	± 6,28
	20,0	± 1,71	20,0	± 2,22	20,0	± 2,07	20,0	± 3,03	20,0	± 3,80	20,0	± 5,66	20,0	± 3,03	20,0	± 3,80	20,0	± 5,66
	30,0	± 1,36	30,0	± 1,77	30,0	± 1,52	30,0	± 2,63	30,0	± 3,35	30,0	± 5,04	30,0	± 2,63	30,0	± 3,35	30,0	± 5,04
	40,0	± 1,02	40,0	± 1,32	40,0	± 0,97	40,0	± 2,23	40,0	± 2,90	40,0	± 4,42	40,0	± 2,23	40,0	± 2,90	40,0	± 4,42
	50,0	± 0,67	50,0	± 0,87	50,0	± 0,42	50,0	± 1,83	50,0	± 2,45	50,0	± 3,80	50,0	± 1,83	50,0	± 2,45	50,0	± 3,80
	60,0	± 0,32	59,8	± 0,42	57,5	± 0,00	60,0	± 1,43	60,0	± 2,00	60,0	± 3,18	60,0	± 1,43	60,0	± 2,00	60,0	± 3,18
	V_{Rd} [kN/element]																	
	± 5,62		± 6,16		± 7,97		± 6,22		± 6,93		± 8,82		± 12,42		± 13,85		± 17,61	

Reinforcement			
tension- / compression bars	2 ø 10	3 ø 10	3 ø 10
shear force bars	2 x 1 ø 6	2 x 1 ø 6	2 x 2 ø 6
u-bars ex works	2 ø 8	4 ø 8	4 ø 10
applicable expansion joint distances [m]	**13,0**	**13,0**	**13,0**

concrete cover parapet wall $c_a \geq 30$ mm; concrete cover slab $25 \geq c_v \geq 35$ mm shear force bars

The u-bars ex works are included in delivery.
The design talbe is also valid for other insulation thicknesses: 60 mm (AS), 100 mm (AL), 120 mm (AXL)
The expansion joint distances vary depending on the joint thickness: 60 mm = 7,80 m; 100 mm = 17,3 m; 120 mm = 21,7 m

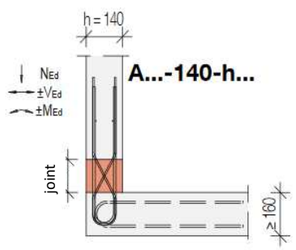

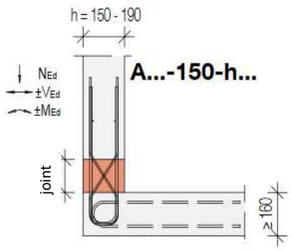

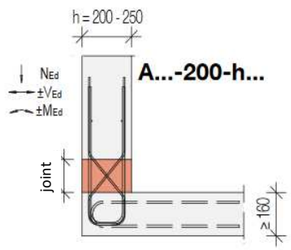

On-site reinforcement Egcobox® type AM

The additional reinforcement is suitable also for Egcobox with insulation thickness 60 mm (AS), 100 mm (AL) and 120 mm (AXL).

type Egcobox	AM10-140	AM10-150	AM10-200	AM20-140	AM20-150	AM20-200	AM30-140	AM30-150	AM30-200
length of element [mm]	**250**								
height of element [mm]	**140 - 250**								
item ⓪ - u-bar reinforcement ex works									
rebar	2 ø8	2 ø8	2 ø8	4 ø8	4 ø8	4 ø8	4 ø10	4 ø10	4 ø10
item ① - lapping reinforcement in parapet									
≥ a_s [cm²] B500	1,57	1,57	1,57	2,36	2,36	2,36	2,36	2,36	2,36
rebar	2 ø10	2 ø10	2 ø10	3 ø10	3 ø10	3 ø10	3 ø10	3 ø10	3 ø10
item ② - u-bar reinforcement in parape									
rebar	ø6 / 250 mm	ø6 / 250 mm	ø6 / 250 mm	ø6 / 250 mm	ø6 / 250 mm	ø6 / 250 mm	ø6 / 150 mm	ø6 / 150 mm	ø6 / 150 mm
item ③ - rebars									
rebar	ø8	ø8	ø8	ø8	ø8	ø8	ø8	ø8	ø8
item ④ - structural reinforcement in the slab edge for thickness <200 mm									
rebar	ø6 / 250 mm	ø6 / 250 mm	ø6 / 250 mm	ø6 / 250 mm	ø6 / 250 mm	ø6 / 250 mm	ø6 / 250 mm	ø6 / 250 mm	ø6 / 250 mm
item ④ - structural reinforcement in the slab edge for thickness >200 mm									
rebar	ø6 / 150 mm	ø6 / 150 mm	ø6 / 150 mm	ø6 / 150 mm	ø6 / 150 mm	ø6 / 150 mm	ø6 / 150 mm	ø6 / 150 mm	ø6 / 150 mm
item ⑤ - lapping reinforcement in slab									
≥ a_s [cm²] B500	1,01	1,01	1,01	2,01	2,01	2,01	2,01	2,01	2,01
rebar	2 ø8	2 ø8	2 ø8	4 ø8	4 ø8	4 ø8	4 ø10	4 ø10	4 ø10

The suggested reinforcement is selected to transfer 100% of the M_{Rd} and V_{Rd} of the Egcobox®. An other reinforcement selection is possible.

design proposal

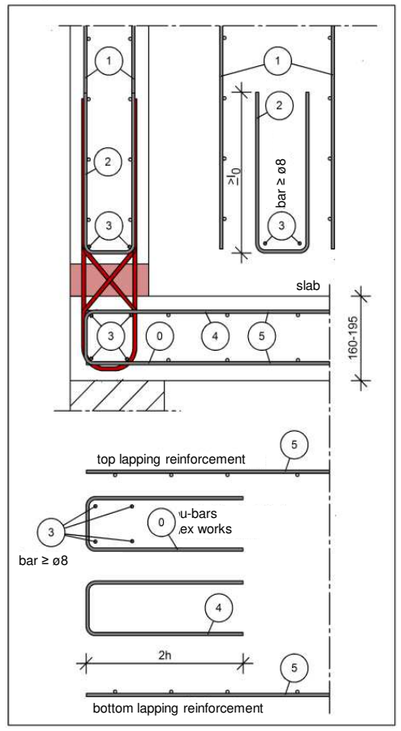

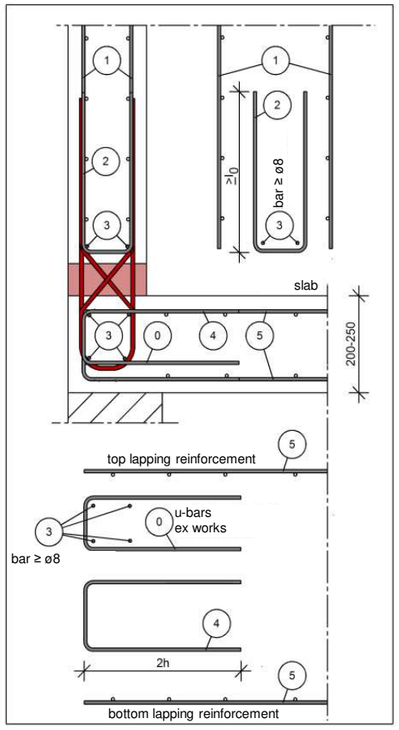

boundery conditions

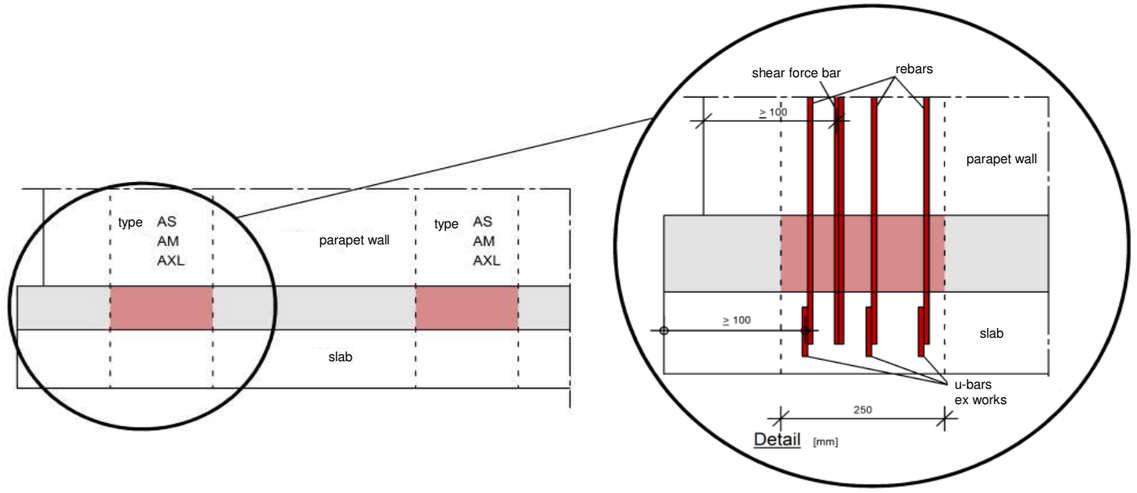

Design table Egcobox® type FM

for console element parapet, insulation 80 mm

Egcobox type	FM10-160	FM10-200	FM20-160	FM20-200	FM30-160	FM30-200
length of element [mm]	250		250		250	
height of element [mm]	160 - 190	200 - 250	160 - 190	200 - 250	160 - 190	200 - 250
width of parapet wall [mm]	≥ 150		≥ 150		≥ 150	

concrete strength	N_{Rd} [kN/element] I M_{Rd} [kNm/element]											
	$N_{R,d}$	$M_{R,d}$	$N_{R,d}$	$M_{R,d}$	$N_{R,d}$	$M_{R,d}$	$N_{R,d}$	$M_{R,d}$	$N_{R,d}$	$M_{R,d}$	$N_{R,d}$	$M_{R,d}$
C20/25 parapet wall C20/25 slab C20/25	- 28,0	± 0,00	- 28,0	± 0,00	- 42,0	± 0,00	- 42,0	± 0,00	- 56,0	± 0,00	- 56,0	± 0,00
	- 16,7	± 0,52	- 16,7	± 0,74	- 25,1	± 0,78	- 25,1	± 1,11	- 33,5	± 1,04	- 33,5	± 1,49
	- 9,2	± 0,86	- 9,2	± 1,24	- 13,9	± 1,29	- 13,9	± 1,86	- 18,5	± 1,73	- 18,5	± 2,48
	- 0,0	± 1,29	- 0,0	± 1,85	- 0,0	± 1,93	- 0,0	± 2,77	- 0,0	± 2,58	- 0,3	± 3,67
	0,0	± 1,73	0,0	± 2,48	0,0	± 2,59	0,0	± 3,67	0,0	± 3,34	0,0	± 3,67
	2,5	± 1,73	2,5	± 2,48	3,7	± 2,59	4,3	± 3,67	7,4	± 3,34	24,3	± 3,67
	17,5	± 1,04	17,5	± 1,49	26,2	± 1,55	26,2	± 2,23	35,0	± 2,07	35,0	± 2,97
	25,0	± 0,69	25,0	± 0,99	37,5	± 1,04	37,5	± 1,49	50,0	± 1,38	50,0	± 1,98
	32,5	± 0,35	32,5	± 0,50	48,7	± 0,52	48,7	± 0,74	65,0	± 0,69	65,0	± 0,99
	40,0	± 0,00	40,0	± 0,00	60,0	± 0,00	60,0	± 0,00	80,0	± 0,00	80,0	± 0,00
	V_{Rd} [kN/element]											
	± 13,80		± 17,60		± 13,80		± 17,60		± 13,80		± 17,60	

concrete strength	N_{Rd} [kN/element] I M_{Rd} [kNm/element]											
	$N_{R,d}$	$M_{R,d}$	$N_{R,d}$	$M_{R,d}$	$N_{R,d}$	$M_{R,d}$	$N_{R,d}$	$M_{R,d}$	$N_{R,d}$	$M_{R,d}$	$N_{R,d}$	$M_{R,d}$
C25/30 parapet wall C25/30 slab ≥C20/25	- 32,5	± 0,00	- 32,5	± 0,00	- 48,7	± 0,00	- 48,7	± 0,00	- 65,0	± 0,00	- 65,0	± 0,00
	- 21,2	± 0,52	- 21,2	± 0,74	- 31,8	± 0,78	- 31,8	± 1,11	- 42,5	± 1,04	- 42,5	± 1,49
	- 13,7	± 0,86	- 13,7	± 1,24	- 20,6	± 1,29	- 20,6	± 1,86	- 27,5	± 1,73	- 27,5	± 2,48
	- 4,5	± 1,29	- 4,5	± 1,85	- 6,7	± 1,93	- 6,7	± 2,77	- 9,0	± 2,58	- 9,0	± 3,70
	0,0	± 1,73	0,0	± 2,48	0,0	± 2,59	0,0	± 3,71	0,0	± 3,45	0,0	± 4,26
	8,9	± 1,73	8,9	± 2,48	13,3	± 2,59	13,3	± 3,71	17,8	± 3,45	28,3	± 4,26
	23,9	± 1,04	23,9	± 1,49	35,9	± 1,55	35,9	± 2,23	47,8	± 2,07	47,8	± 2,97
	31,4	± 0,69	31,4	± 0,99	47,1	± 1,04	47,1	± 1,49	62,8	± 1,38	62,8	± 1,98
	38,9	± 0,35	38,9	± 0,50	58,4	± 0,52	58,4	± 0,74	77,8	± 0,69	77,8	± 0,99
	46,4	± 0,00	46,4	± 0,00	69,6	± 0,00	69,6	± 0,00	92,8	± 0,00	92,8	± 0,00
	V_{Rd} [kN/element]											
	± 13,80		± 17,60		± 13,80		± 17,60		± 13,80		± 17,60	

Reinforcement			
tension- / compression bars	2 ø 8	3 ø 8	4 ø 8
shear force bars	2 x 2 ø 6	2 x 2 ø 6	2 x 2 ø 6
u-bars ex works	3 ø 8	3 ø 8	3 ø 8
applicable expansion joint distances [m]	**13,5**	**13,5**	**13,5**

concrete cover parapet wall c_a ≥ 40 mm; concrete cover slab c_{vo} = 35 mm shear force bars

The u-bars ex works are included in delivery.

The design talbe is also valid for other insulation thicknesses: 60 mm (FS), 100 mm (FL), 120 mm (FXL)

The expansion joint distances vary depending on the joint thickness: 60 mm = 8,10 m; 80 mm = 13,5 m; 100 mm = 18,2 m

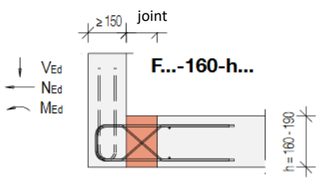

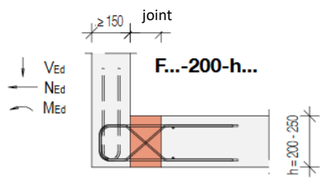

On-site reinforcement Egcobox® type FM

The additional reinforcement is suitable also for Egcobox with insulation thickness 60 mm (FS), 100 mm (FL) and 120 mm (FXL).

type Egcobox	FM10-160	FM10-200	FM20-160	FM20-200	FM30-160	FM30-200
length of element [mm]	**250**					
height of element [mm]	**160 - 250**					
item ⓪ - u-bar reinforcement ex works						
rebar	3 ø8	3 ø8	3 ø8	3 ø8	3 ø8	3 ø8
item ① - lapping reinforcement in parapet						
≥ a_s [cm²] B500	1,51	1,51	1,51	1,51	1,51	1,51
rebar	3 ø8	3 ø8	3 ø8	3 ø8	3 ø8	3 ø8
item ② - u-bar reinforcement in parapet for thickness <200 mm						
rebar	ø6 / 250 mm	ø6 / 250 mm	ø6 / 250 mm	ø6 / 250 mm	ø6 / 250 mm	ø6 / 250 mm
item ② - u-bar reinforcement in parapet for thickness >200 mm						
rebar	ø6 / 150 mm	ø6 / 150 mm	ø6 / 150 mm	ø6 / 150 mm	ø6 / 150 mm	ø6 / 150 mm
item ③ - rebars						
rebar	ø8	ø8	ø8	ø8	ø8	ø8
item ④ - design reinforcement in the slab edge						
rebar	ø6 / 250 mm	ø6 / 250 mm	ø6 / 250 mm	ø6 / 250 mm	ø6 / 250 mm	ø6 / 250 mm
item ⑤ - lapping reinforcement in slab						
≥ a_s [cm²] B500	1,01	1,01	1,51	1,51	2,01	2,01
rebar	2 ø8	2 ø8	3 ø8	3 ø8	4 ø8	4 ø8

The suggested reinforcement is selected to transfer 100% of the M_{Rd} and V_{Rd} of the Egcobox®. An other reinforcement selection is possible.

design proposal

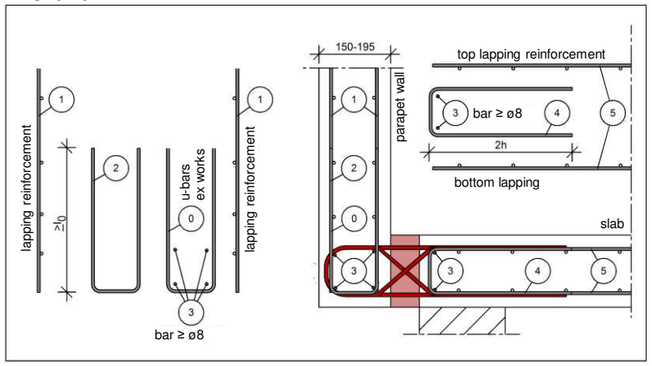

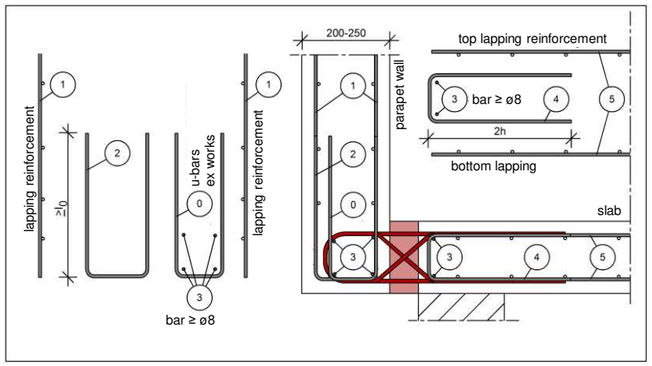

boundery conditions

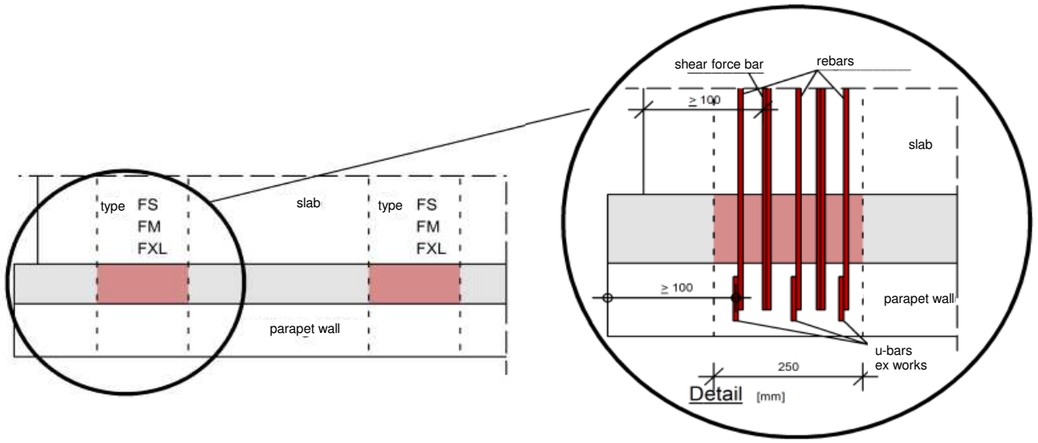

Design table Egcobox® type OM

for corbel elements, insulation 80 mm

Egcobox type	OM16	OM20
length of element [mm]	250	
height of element [mm]	180 - 250	
width of corbel element [mm]	160	200

concrete strength	distance x [mm]	N_{Rd} [kN/element]	
	65 - 145	± 15,0	± 20,0
		V_{Rd} [kN/element]	
C20/25	65,0	26,7	29,1
	75,0	25,5	27,8
	85,0	24,4	26,7
	95,0	23,4	25,6
	105,0	22,5	24,6
	115,0	-	23,6
	125,0	-	22,8
	135,0	-	22,0
	145,0	-	21,2

concrete strength	distance x [mm]	N_{Rd} [kN/element]	
	65 - 145	± 15,0	± 20,0
		V_{Rd} [kN/element]	
C25/30	65,0	27,7	30,5
	75,0	27,5	29,2
	85,0	26,3	27,9
	95,0	25,2	26,8
	105,0	24,2	25,7
	115,0	-	24,8
	125,0	-	23,9
	135,0	-	23,0
	145,0	-	22,2

Reinforcement	
tension- / compression bars	3 ø 10
compression bearings	2 ø 12
applicable expansion joint distances [m]	**11,7**

concrete cover corbel element $c_a \geq 30$ mm; concrete cover slab $c_{vo} = 30$ mm

The console must generally be designed with at least concrete strength C25/30.
The design talbe is also valid for other insulation thicknesses: 60 mm (OS), 100 mm (OL), 120 mm (OXL)
The expansion joint distances vary depending on the joint thickness: 60 mm = 6,90 m; 80 mm = 11,7 m; 100 mm = 15,7 m

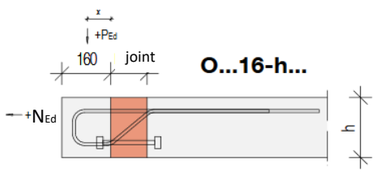

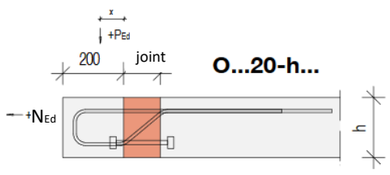

On-site reinforcement Egcobox® type OM

The additional reinforcement is suitable also for Egcobox with insulation thickness 60 mm (OS), 100 mm (OL) and 120 mm (OXL).

type Egcobox	OM16	OM20
length of element [mm]	**250**	
height of element [mm]	**180 - 250**	
item ① - lapping reinforcement		
≥ a_s [cm²] B500	2,36	2,36
rebar	3 ø10	3 ø10
item ② - suspension reinforcement in corbel [1)]		
≥ a_s [cm²] B500	3,06	3,06
rebar	4 ø10	4 ø10
item ③ - rebars		
rebar	ø8	ø8
item ④ - structural reinforcement in the slab edge		
rebar	ø6 / 250 mm	ø6 / 250 mm

The suggested reinforcement is selected to transfer 100% of the M_{Rd} and V_{Rd} of the Egcobox®. An other reinforcement selection is possible.

[1)] The required reinforcement of the corbel itself has to be calculated by the responsible engineer in additional.

design proposal

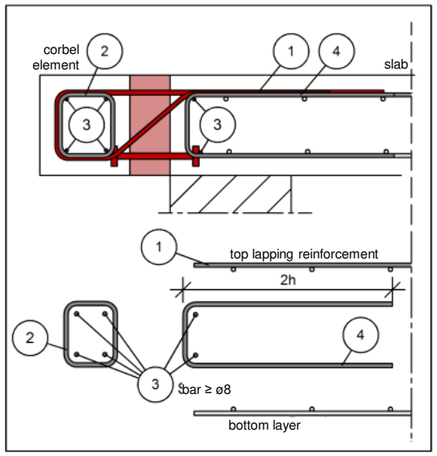

boundery conditions

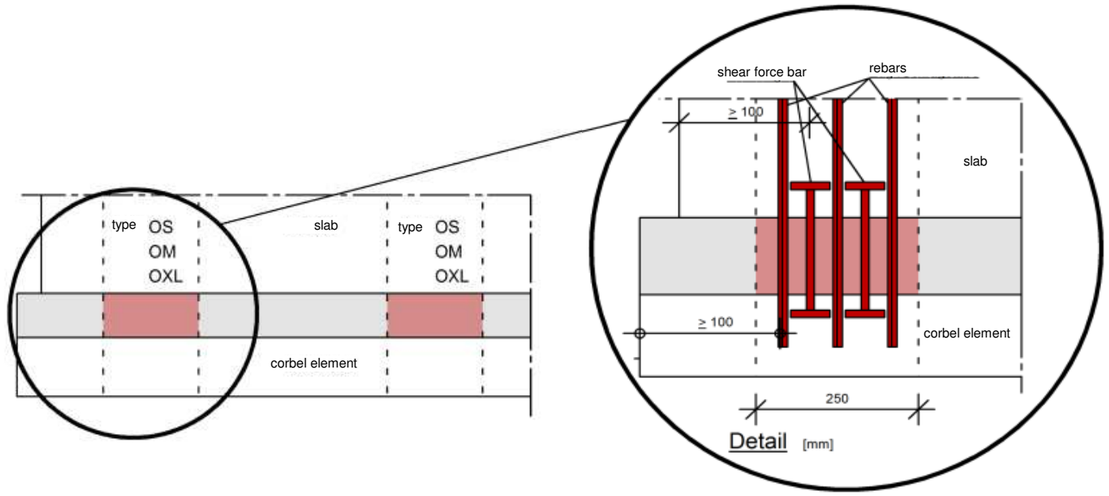

Design table Egcobox® type MM-Module - C25/30

Supplementary elements for transmission of normal forces and horizontal shear forces, insulation 80 mm

	Egcobox type			MM-VH10	MM-NH10	MM-NH15	MM-NH20	MM-VNH10	MM-VNH15	MM-VNH20	MM-VNH-E10	MM-VNH-E20
	length of element [mm]			100	100	100	100	100	100	100	100	100
	concrete cover [mm]			M_{Rd} [kNm/element]								
	C30	C35	C50									
height of connection [mm]		**160**	175	-	-	-	-	-	-	-	5,2	8,4
	160	165	**180**	-	-	-	-	-	-	-	5,5	8,9
	165	170	185	-	-	-	-	-	-	-	5,8	9,3
	170	175	190	-	-	-	-	-	-	-	6,1	9,8
	175	**180**	195	-	-	-	-	-	-	-	6,4	10,3
	180	185	**200**	-	-	-	-	-	-	-	6,7	10,8
	185	190	205	-	-	-	-	-	-	-	7,0	11,3
	190	195	210	-	-	-	-	-	-	-	7,3	11,8
	195	**200**	215	-	-	-	-	-	-	-	7,6	12,3
	200	205	**220**	-	-	-	-	-	-	-	7,9	12,8
	205	210	225	-	-	-	-	-	-	-	8,2	13,3
	210	215	230	-	-	-	-	-	-	-	8,5	13,8
	215	**220**	235	-	-	-	-	-	-	-	8,8	14,3
	220	225	**240**	-	-	-	-	-	-	-	9,1	14,8
	225	230	245	-	-	-	-	-	-	-	9,4	15,2
	230	235	250	-	-	-	-	-	-	-	9,7	15,7
	235	**240**	255	-	-	-	-	-	-	-	10,0	16,2
	240	245	**260**	-	-	-	-	-	-	-	10,3	16,7
	245	250	265	-	-	-	-	-	-	-	10,6	17,2
	250	255	270	-	-	-	-	-	-	-	10,9	17,7
	255	**260**	275	-	-	-	-	-	-	-	11,2	18,2
	260	265	**280**	-	-	-	-	-	-	-	11,5	18,7
	265	270	285	-	-	-	-	-	-	-	11,8	19,2
	270	275	290	-	-	-	-	-	-	-	12,1	19,7
	275	**280**	295	-	-	-	-	-	-	-	12,4	20,2
	280	285	**300**	-	-	-	-	-	-	-	12,6	20,7
	285	290		-	-	-	-	-	-	-	12,9	21,1
	290	295		-	-	-	-	-	-	-	13,2	21,6
	295	**300**		-	-	-	-	-	-	-	13,5	22,1
	300			-	-	-	-	-	-	-	13,8	22,6

	concrete cover [mm]			V_{Rdy} [kN/element]								
	C30	C35	C50									
connection -height [mm]	160-300	160-300	175-300	±10,5	-	-	-	±10,5	±10,5	±39,2	±17,9	±35,0

	concrete cover [mm]			N_{Rdx} [kN/element]								
	C30	C35	C50									
connection -height [mm]	160-300	160-300	175-300	-	±14,0	±21,2	±60,1	±14,0	±21,2	±60,1	60,0	98,3

Egcobox® MM-VH and MM-VNH only to be used in combination with other Egcobox® elements. Prerequisite pressure absorption with D_{Rd} > 10.5 kN resp. > 39,2 kN

Egcobox® MM-VNH-E for transfer of uplifting moments M_{Rd} is to be used only in connection with other Egcobox® elements ≥ MM20. The concrete cover refers to the adjacent Egcobox® ≥ MM20. M_{Rd} and N_{Rdx} do not act simultaneously.

Reinforcement Egcobox® type MM-Module

Egcobox type	MM-VH10	MM-NH10	MM-NH15	MM-NH20	MM-VNH10	MM-VNH15	MM-VNH20	MM-VNH-E10	MM-VNH-E20
length of element [mm]	**100**	**100**	**100**	**100**	**100**	**100**	**100**	**100**	**100**
tensile bars	-	-	-	-	-	-	-	2 ø 8	2 ø 12
length of tensile bars [mm]	-	-	-	-	-	-	-	1070	1300
tension / compression bars	-	1 ø 10	1 ø 10	1 ø 14	1 ø 10	1 ø 10	1 ø 14	-	-
length of tension / compression bars [mm	-	410	580	1100	410	580	1100	-	-
shear force bars	2x 1 ø 8	-	-	-	2x 1 ø 8	2x 1 ø 8	2x 1 ø 10	2x 1 ø 8	2x 1 ø 10
length of shear force bars l_0 [mm]	200				200	200	520	340	600
applicable expansion joint distances [n	**13,5**	**13,5**	**13,5**	**11,7**	**13,5**	**13,5**	**11,7**	**13,5**	**13,5**

BUILDING
COMMON GROUND

MAX FRANK®

Egcobox® M

ETA-19/0046 (EU)

Concrete quality C20/25

Design table Egcobox® type MM - C20/25

for cantilever slabs for transmission of moment and shear force, insulation 80 mm

	Egcobox type			MM10-K	MM20	MM25	MM30	MM35	MM45	MM50	MM55	MM60	MM65	MM70	MM75	MM80	MM80-K	MM110-K	MM120-K	MM130-K	MM150-K
	length of element [mm]			500	1000	1000	1000	1000	1000	1000	1000	1000	1000	1000	1000	1000	500	500	500	500	500
	concrete cover [mm]			M_{Rd} [kNm/element]																	
	C30	C35	C50																		
height of connection [mm] good bonding conditions		**160**	175	-9,1	-14,3	-17,9	-21,4	-21,4	-25,0	-28,6	-32,2	-35,7	-39,3	-42,9	-46,3	-49,0	-24,0	-28,3	-31,5	-34,0	-48,3
	160	165	**180**	-9,6	-15,1	-18,9	-22,7	-22,7	-26,5	-30,3	-34,1	-37,9	-41,7	-45,4	-49,0	-51,9	-25,4	-30,0	-33,4	-36,1	-51,4
	165	170	185	-10,1	-16,0	-20,0	-24,0	-24,0	-28,0	-32,0	-36,0	-40,0	-44,0	-48,0	-51,8	-54,8	-26,9	-31,7	-35,4	-38,2	-54,5
	170	175	190	-10,7	-16,8	-21,1	-25,3	-25,3	-29,5	-33,7	-37,9	-42,1	-46,3	-50,5	-54,5	-57,7	-28,3	-33,5	-37,3	-40,3	-57,5
	175	**180**	195	-11,2	-17,7	-22,1	-26,5	-26,5	-31,0	-35,4	-39,8	-44,2	-48,7	-53,1	-57,3	-60,6	-29,7	-35,2	-39,3	-42,4	-60,6
	180	185	**200**	-11,7	-18,6	-23,2	-27,8	-27,8	-32,5	-37,1	-41,7	-46,4	-51,0	-55,7	-60,0	-63,5	-31,2	-37,0	-41,2	-44,5	-63,6
	185	190	205	-12,2	-19,4	-24,3	-29,1	-29,1	-34,0	-38,8	-43,7	-48,5	-53,4	-58,2	-62,8	-66,5	-32,6	-38,7	-43,2	-46,6	-66,7
	190	195	210	-12,8	-20,3	-25,3	-30,4	-30,4	-35,4	-40,5	-45,6	-50,6	-55,7	-60,8	-65,5	-69,4	-34,0	-40,5	-45,1	-48,7	-69,8
	195	**200**	215	-13,3	-21,1	-26,4	-31,7	-31,7	-36,9	-42,2	-47,5	-52,8	-58,0	-63,3	-68,3	-72,3	-35,4	-42,2	-47,0	-50,8	-72,8
	200	205	**220**	-13,8	-22,0	-27,4	-32,9	-32,9	-38,4	-43,9	-49,4	-54,9	-60,4	-65,9	-71,0	-75,2	-36,9	-44,0	-49,0	-52,9	-75,9
	205	210	225	-14,4	-22,8	-28,5	-34,2	-34,2	-39,9	-45,6	-51,3	-57,0	-62,7	-68,4	-73,8	-78,1	-38,3	-45,7	-50,9	-55,0	-78,9
	210	215	230	-14,9	-23,7	-29,6	-35,5	-35,5	-41,4	-47,3	-53,2	-59,1	-65,1	-71,0	-76,5	-81,0	-39,7	-47,4	-52,9	-57,1	-82,0
	215	**220**	235	-15,4	-24,5	-30,6	-36,8	-36,8	-42,9	-49,0	-55,1	-61,3	-67,4	-73,5	-79,3	-83,9	-41,2	-49,2	-54,8	-59,2	-85,1
	220	225	**240**	-15,9	-25,4	-31,7	-38,0	-38,0	-44,4	-50,7	-57,1	-63,4	-69,7	-76,1	-82,1	-86,9	-42,6	-50,9	-56,8	-61,3	-88,1
	225	230	245	-16,5	-26,2	-32,8	-39,3	-39,3	-45,9	-52,4	-59,0	-65,5	-72,1	-78,6	-84,8	-89,8	-44,0	-52,7	-58,7	-63,4	-91,2
	230	235	250	-17,0	-27,1	-33,8	-40,6	-40,6	-47,4	-54,1	-60,9	-67,7	-74,4	-81,2	-87,6	-92,7	-45,5	-54,4	-60,7	-65,5	-94,2
	235	**240**	255	-17,5	-27,9	-34,9	-41,9	-41,9	-48,8	-55,8	-62,8	-69,8	-76,8	-83,7	-90,3	-95,6	-46,9	-56,2	-62,6	-67,6	-97,3
	240	245	**260**	-18,0	-28,8	-36,0	-43,1	-43,1	-50,3	-57,5	-64,7	-71,9	-79,1	-86,3	-93,1	-98,5	-48,3	-57,9	-64,5	-69,7	-100,4
	245	250	265	-18,6	-29,6	-37,0	-44,4	-44,4	-51,8	-59,2	-66,6	-74,0	-81,4	-88,8	-95,8	-101,4	-49,7	-59,6	-66,5	-71,8	-103,4
	250	255	270	-19,1	-30,5	-38,1	-45,7	-45,7	-53,3	-60,9	-68,5	-76,2	-83,8	-91,4	-98,6	-104,4	-51,2	-61,4	-68,4	-73,9	-106,5
	255	**260**	275	-19,6	-31,3	-39,1	-47,0	-47,0	-54,8	-62,6	-70,5	-78,3	-86,1	-93,9	-101,3	-107,3	-52,6	-63,1	-70,4	-76,0	-109,5
	260	265	**280**	-20,2	-32,2	-40,2	-48,2	-48,2	-56,3	-64,3	-72,4	-80,4	-88,5	-96,5	-104,1	-110,2	-54,0	-64,9	-72,3	-78,1	-112,6
	265	270	285	-20,7	-33,0	-41,3	-49,5	-49,5	-57,8	-66,0	-74,3	-82,5	-90,8	-99,1	-106,8	-113,1	-55,5	-66,6	-74,3	-80,2	-115,7
	270	275	290	-21,2	-33,9	-42,3	-50,8	-50,8	-59,3	-67,7	-76,2	-84,7	-93,1	-101,6	-109,6	-116,0	-56,9	-68,4	-76,2	-82,3	-118,7
	275	**280**	295	-21,7	-34,7	-43,4	-52,1	-52,1	-60,8	-69,4	-78,1	-86,8	-95,5	-104,2	-112,3	-118,9	-58,3	-70,1	-78,2	-84,4	-121,8
	280	285	**300**	-22,3	-35,6	-44,5	-53,4	-53,4	-62,2	-71,1	-80,0	-88,9	-97,8	-106,7	-115,1	-121,8	-59,7	-71,9	-80,1	-86,5	-124,8
	285	290		-22,8	-36,4	-45,5	-54,6	-54,6	-63,7	-72,8	-81,9	-91,1	-100,2	-109,3	-117,8	-124,8	-61,2	-73,6	-82,0	-88,6	-127,9
	290	295		-23,3	-37,3	-46,6	-55,9	-55,9	-65,2	-74,5	-83,9	-93,2	-102,5	-111,8	-120,6	-127,7	-62,6	-75,3	-84,0	-90,7	-131,0
	295	**300**		-23,9	-38,1	-47,7	-57,2	-57,2	-66,7	-76,2	-85,8	-95,3	-104,8	-114,4	-123,4	-130,6	-64,0	-77,1	-85,9	-92,8	-134,0
	300			-24,4	-39,0	-48,7	-58,5	-58,5	-68,2	-77,9	-87,7	-97,4	-107,2	-116,9	-126,1	-133,5	-65,5	-78,8	-87,9	-94,9	-137,1

Shear force level		concrete cover [mm]			V_{Rd} [kN/element]																		
		C30	C35	C50																			
height of connection [mm] good bonding conditions	VS	160-190	160-195	175-210	21,0	41,9	41,9	41,9	41,9	41,9	41,9	41,9	41,9	41,9	41,9	41,9	41,9	41,9	41,9	41,9	41,9	41,9	41,9
		195-300	200-300	215-300	21,0	41,9	41,9	41,9	41,9	41,9	41,9	41,9	41,9	41,9	41,9	41,9	41,9	41,9	41,9	41,9	41,9	41,9	41,9
	V1	160-190	160-195	175-210	37,3	74,6	74,6	74,6	74,6	74,6	74,6	74,6	74,6	74,6	74,6	74,6	74,6	74,6	74,6	74,6	74,6	74,6	74,6
		195-300	200-300	215-300	37,3	74,6	74,6	74,6	74,6	74,6	74,6	74,6	74,6	74,6	74,6	74,6	74,6	74,6	74,6	74,6	74,6	74,6	74,6
	V2	160-170	160-175	175-190	55,9	111,9	111,9	111,9	111,9	111,9	111,9	111,9	111,9	111,9	111,9	111,9	111,9	111,9	-	111,9	111,9	111,9	111,9
		175-190	180-195	195-210	55,9	111,9	111,9	111,9	111,9	111,9	111,9	111,9	111,9	111,9	111,9	111,9	111,9	111,9	116,5	111,9	111,9	111,9	111,9
		195-300	200-300	215-300	55,9	111,9	111,9	111,9	111,9	111,9	111,9	111,9	111,9	111,9	111,9	111,9	111,9	111,9	116,5	111,9	111,9	111,9	111,9
	V3	160-190	160-195	175-210	74,6	149,2	149,2	149,2	149,2	149,2	149,2	149,2	149,2	149,2	149,2	149,2	149,2	149,2	-	-	-	-	-
		195-300	200-300	215-300	74,6	149,2	149,2	149,2	149,2	149,2	149,2	149,2	149,2	149,2	149,2	149,2	149,2	149,2	-	-	-	-	-
	V4	175-190	180-195	195-210	-	233,1	233,1	233,1	233,1	233,1	233,1	233,1	233,1	233,1	233,1	233,1	233,1	233,1	145,7	145,7	145,7	145,7	145,7
		195-300	200-300	215-300	-	233,1	233,1	233,1	233,1	233,1	233,1	233,1	233,1	233,1	233,1	233,1	233,1	233,1	145,7	145,7	145,7	145,7	145,7
	V6±	160-190	160-195	175-210	+21/ -21	+41,9/ -41,9	+41,9/ -41,9	+41,9/ -41,9	+41,9/ -41,9	+41,9/ -41,9	+41,9/ -41,9	+41,9/ -41,9	+41,9/ -41,9	+41,9/ -41,9	+41,9/ -41,9	+41,9/ -41,9	+41,9/ -41,9	+41,9/ -41,9	+21/ -21	+41,9/ -41,9	+41,9/ -41,9	+41,9/ -41,9	+41,9/ -41,9
		195-300	200-300	215-300	+21/ -21	+41,9/ -41,9	+41,9/ -41,9	+41,9/ -41,9	+41,9/ -41,9	+41,9/ -41,9	+41,9/ -41,9	+41,9/ -41,9	+41,9/ -41,9	+41,9/ -41,9	+41,9/ -41,9	+41,9/ -41,9	+41,9/ -41,9	+41,9/ -41,9	+21/ -21	+41,9/ -41,9	+41,9/ -41,9	+41,9/ -41,9	+41,9/ -41,9
	V7±	160-190	160-195	175-210	+41,9/ -31,5	+83,9/ -62,9	+83,9/ -62,9	+83,9/ -62,9	+83,9/ -62,9	+83,9/ -62,9	+83,9/ -62,9	+111,9/ -74,6	+111,9/ -74,6	+111,9/ -74,6	+111,9/ -74,6	+111,9/ -74,6	+111,9/ -74,6	+111,9/ -74,6	+55,9/ -37,3	+111,9/ -74,6	+111,9/ -74,6	+111,9/ -74,6	+111,9/ -74,6
		195-300	200-300	215-300	+41,9/ -31,5	+83,9/ -62,9	+83,9/ -62,9	+83,9/ -62,9	+83,9/ -62,9	+83,9/ -62,9	+83,9/ -62,9	+111,9/ -74,6	+111,9/ -74,6	+111,9/ -74,6	+111,9/ -74,6	+111,9/ -74,6	+111,9/ -74,6	+111,9/ -74,6	+55,9/ -37,3	+111,9/ -74,6	+111,9/ -74,6	+111,9/ -74,6	+111,9/ -74,6
	V8±	175-190	180-195	195-210	+87,4/ -87,4	+174,8/ -174,8	+174,8/ -174,8	+174,8/ -174,8	+174,8/ -174,8	+174,8/ -174,8	+174,8/ -174,8	+174,8/ -174,8	+174,8/ -174,8	+174,8/ -174,8	+174,8/ -174,8	+174,8/ -174,8	+174,8/ -174,8	+174,8/ -174,8	+87,4/ -87,4	+145,7/ -145,7	+145,7/ -145,7	+145,7/ -145,7	+145,7/ -145,7
		195-300	200-300	215-300	+87,4/ -87,4	+174,8/ -174,8	+174,8/ -174,8	+174,8/ -174,8	+174,8/ -174,8	+174,8/ -174,8	+174,8/ -174,8	+174,8/ -174,8	+174,8/ -174,8	+174,8/ -174,8	+174,8/ -174,8	+174,8/ -174,8	+174,8/ -174,8	+174,8/ -174,8	+87,4/ -87,4	+145,7/ -145,7	+145,7/ -145,7	+145,7/ -145,7	+145,7/ -145,7

Shear force level VS to V4 also possible with lifting shear force (-21.0 kN/element depending on height of connection/concrete cover) (designation: VS±, V1±, V2±, V3± or V4±)

Reinforcement Egcobox® type MM

Egcobox type	MM10-K	MM20	MM25	MM30	MM35	MM45	MM50	MM55	MM60	MM65	MM70	MM75	MM80	MM80-K	MM110-K	MM120-K	MM130-K	MM150-K
length of element [mm]	**500**	**1000**	**1000**	**1000**	**1000**	**1000**	**1000**	**1000**	**1000**	**1000**	**1000**	**1000**	**1000**	**500**	**500**	**500**	**500**	**500**
tensile bars	4 ø 8	4 ø 12	5 ø 12	6 ø 12	6 ø 12	7 ø 12	8 ø 12	9 ø 12	10 ø 12	11 ø 12	12 ø 12	13 ø 12	14 ø 12	7 ø 12	6 ø 14	7 ø 14	8 ø 14	7 ø 16
length of tensile bars [mm]	1090	1300	1300	1300	1300	1300	1300	1300	1300	1300	1300	1300	1300	1300	1580	1580	1580	2520
compression bearings	2 ø 12	4 ø 12	4 ø 12	4 ø 12	5 ø 12	5 ø 12	6 ø 12	7 ø 12	8 ø 12	9 ø 12	10 ø 12	11 ø 12	12 ø 12	6 ø 12	-	-	-	-
compression bars	-	-	-	-	-	-	-	-	-	-	-	-	-	-	6 ø 14	7 ø 14	8 ø 14	7 ø 16
length of compression bars [mm]															1580	1580	1580	2520
shear force bars VS	2 ø 6	4 ø 6	4 ø 6	4 ø 6	4 ø 6	4 ø 6	4 ø 6	4 ø 6	4 ø 6	4 ø 6	4 ø 6	4 ø 6	4 ø 6	4 ø 6	4 ø 6	4 ø 6	4 ø 6	4 ø 6
shear force bars V1	2 ø 8	4 ø 8	4 ø 8	4 ø 8	4 ø 8	4 ø 8	4 ø 8	4 ø 8	4 ø 8	4 ø 8	4 ø 8	4 ø 8	4 ø 8	4 ø 8	4 ø 8	4 ø 8	4 ø 8	4 ø 8
shear force bars V2	3 ø 8	6 ø 8	6 ø 8	6 ø 8	6 ø 8	6 ø 8	6 ø 8	6 ø 8	6 ø 8	6 ø 8	6 ø 8	6 ø 8	6 ø 8	4 ø 10	6 ø 8	6 ø 8	6 ø 8	6 ø 8
shear force bars V3	4 ø 8	8 ø 8	8 ø 8	8 ø 8	8 ø 8	8 ø 8	8 ø 8	8 ø 8	8 ø 8	8 ø 8	8 ø 8	8 ø 8	8 ø 8	-	-	-	-	-
shear force bars V4	-	8 ø 10	8 ø 10	8 ø 10	8 ø 10	8 ø 10	8 ø 10	8 ø 10	8 ø 10	8 ø 10	8 ø 10	8 ø 10	8 ø 10	5 ø 10	5 ø 10	5 ø 10	5 ø 10	5 ø 10
shear force bars VS±	-	4 ø6 / 2 ø6	4 ø6 / 2 ø6	4 ø6 / 2 ø6	4 ø6 / 2 ø6	4 ø6 / 2 ø6	4 ø6 / 2 ø6	4 ø6 / 2 ø6	4 ø6 / 2 ø6	4 ø6 / 2 ø6	4 ø6 / 2 ø6	4 ø6 / 2 ø6	4 ø6 / 2 ø6	4 ø6 / 2 ø6	4 ø6 / 2 ø6	4 ø6 / 2 ø6	4 ø6 / 2 ø6	4 ø6 / 2 ø6
shear force bars V1±	-	4 ø8 / 2 ø6	4 ø8 / 2 ø6	4 ø8 / 2 ø6	4 ø8 / 2 ø6	4 ø8 / 2 ø6	4 ø8 / 2 ø6	4 ø8 / 2 ø6	4 ø8 / 2 ø6	4 ø8 / 2 ø6	4 ø8 / 2 ø6	4 ø8 / 2 ø6	4 ø8 / 2 ø6	4 ø8 / 2 ø6	4 ø8 / 2 ø6	4 ø8 / 2 ø6	4 ø8 / 2 ø6	4 ø8 / 2 ø6
shear force bars V2±	-	6 ø8 / 2 ø6	6 ø8 / 2 ø6	6 ø8 / 2 ø6	6 ø8 / 2 ø6	6 ø8 / 2 ø6	6 ø8 / 2 ø6	6 ø8 / 2 ø6	6 ø8 / 2 ø6	6 ø8 / 2 ø6	6 ø8 / 2 ø6	6 ø8 / 2 ø6	6 ø8 / 2 ø6	4 ø10 / 2 ø6	6 ø8 / 2 ø6	6 ø8 / 2 ø6	6 ø8 / 2 ø6	6 ø8 / 2 ø6
shear force bars V3±	-	8 ø8 / 2 ø6	8 ø8 / 2 ø6	8 ø8 / 2 ø6	8 ø8 / 2 ø6	8 ø8 / 2 ø6	8 ø8 / 2 ø6	8 ø8 / 2 ø6	8 ø8 / 2 ø6	8 ø8 / 2 ø6	8 ø8 / 2 ø6	8 ø8 / 2 ø6	8 ø8 / 2 ø6	-	-	-	-	-
shear force bars V4±	-	8 ø10 / 2 ø6	8 ø10 / 2 ø6	8 ø10 / 2 ø6	8 ø10 / 2 ø6	8 ø10 / 2 ø6	8 ø10 / 2 ø6	8 ø10 / 2 ø6	8 ø10 / 2 ø6	8 ø10 / 2 ø6	8 ø10 / 2 ø6	8 ø10 / 2 ø6	8 ø10 / 2 ø6	5 ø 10 / 2 ø 6	5 ø 10 / 2 ø 6	5 ø 10 / 2 ø 6	5 ø 10 / 2 ø 6	5 ø 10 / 2 ø 6
shear force bars V6±	2 ø6 / 2 ø6	4 ø6 / 4 ø6	4 ø6 / 4 ø6	4 ø6 / 4 ø6	4 ø6 / 4 ø6	4 ø6 / 4 ø6	4 ø6 / 4 ø6	4 ø6 / 4 ø6	4 ø6 / 4 ø6	4 ø6 / 4 ø6	4 ø6 / 4 ø6	4 ø6 / 4 ø6	4 ø6 / 4 ø6	2 ø6 / 2 ø6	4 ø6 / 4 ø6	4 ø6 / 4 ø6	4 ø6 / 4 ø6	4 ø6 / 4 ø6
shear force bars V7±	4 ø6 / 3 ø6	8 ø6 / 6 ø6	8 ø6 / 6 ø6	8 ø6 / 6 ø6	8 ø6 / 6 ø6	8 ø6 / 6 ø6	8 ø6 / 6 ø6	6 ø8 / 4 ø8	6 ø8 / 4 ø8	6 ø8 / 4 ø8	6 ø8 / 4 ø8	6 ø8 / 4 ø8	6 ø8 / 4 ø8	3 ø8 / 2 ø8	6 ø8 / 4 ø8	6 ø8 / 4 ø8	6 ø8 / 4 ø8	6 ø8 / 4 ø8
shear force bars V8±	3 ø10 / 3 ø10	6 ø10 / 6 ø10	6 ø10 / 6 ø10	6 ø10 / 6 ø10	6 ø10 / 6 ø10	6 ø10 / 6 ø10	6 ø10 / 6 ø10	6 ø10 / 6 ø10	6 ø10 / 6 ø10	6 ø10 / 6 ø10	6 ø10 / 6 ø10	6 ø10 / 6 ø10	6 ø10 / 6 ø10	3 ø10 / 3 ø10	5 ø10 / 5 ø10	5 ø10 / 5 ø10	5 ø10 / 5 ø10	5 ø10 / 5 ø10
applicable expansion joint distances [m]	**11,7**	**11,7**	**11,7**	**11,7**	**11,7**	**11,7**	**11,7**	**11,7**	**11,7**	**11,7**	**11,7**	**11,7**	**11,7**	**11,7**	**11,7**	**11,7**	**11,7**	**10,1**

The Egcobox® is also available as semi-prefab version in variant "FO" (from height 185 mm) or "F" (from height 160 mm): e.g. MM50-FO-V1-C35-h200

Torsion of the slab in the area of the insulation joint - Egcobox® type MM

	Egcobox type			MM10-K	MM20	MM25	MM30	MM35	MM45	MM50	MM55	MM60	MM65	MM70	MM75	MM80	MM80-K	MM110-K	MM120-K	MM130-K	MM150-K
	length of element [mm]			**500**	**1000**	**1000**	**1000**	**1000**	**1000**	**1000**	**1000**	**1000**	**1000**	**1000**	**1000**	**1000**	**500**	**500**	**500**	**500**	**500**
	concrete cover [mm]			**banking factor k [1/kNm]**																	
	C30	**C35**	**C50**																		
height of connection [mm] good bonding conditions		**160**	175	1,308	0,946	0,788	0,683	0,652	0,576	0,499	0,440	0,394	0,357	0,326	0,300	0,278	0,556	0,786	0,674	0,590	0,520
	160	165	**180**	1,168	0,843	0,702	0,608	0,580	0,513	0,445	0,392	0,351	0,318	0,290	0,267	0,247	0,495	0,697	0,598	0,523	0,460
	165	170	185	1,049	0,756	0,629	0,545	0,520	0,460	0,399	0,352	0,315	0,285	0,260	0,239	0,222	0,444	0,623	0,534	0,467	0,410
	170	175	190	0,948	0,681	0,567	0,492	0,469	0,415	0,359	0,317	0,284	0,257	0,235	0,216	0,200	0,400	0,560	0,480	0,420	0,368
	175	**180**	195	0,861	0,617	0,514	0,446	0,425	0,376	0,326	0,287	0,257	0,233	0,213	0,196	0,181	0,362	0,506	0,433	0,379	0,331
	180	185	**200**	0,785	0,562	0,468	0,406	0,387	0,342	0,296	0,262	0,234	0,212	0,193	0,178	0,165	0,330	0,459	0,393	0,344	0,300
	185	190	205	0,719	0,514	0,428	0,371	0,354	0,313	0,271	0,239	0,214	0,194	0,177	0,163	0,151	0,302	0,419	0,359	0,314	0,273
	190	195	210	0,661	0,471	0,393	0,340	0,325	0,287	0,249	0,219	0,196	0,178	0,162	0,149	0,138	0,277	0,383	0,329	0,287	0,250
	195	**200**	215	0,609	0,434	0,362	0,313	0,299	0,265	0,229	0,202	0,181	0,164	0,150	0,138	0,127	0,255	0,352	0,302	0,264	0,229
	200	205	**220**	0,564	0,401	0,334	0,290	0,276	0,244	0,212	0,187	0,167	0,151	0,138	0,127	0,118	0,236	0,325	0,278	0,244	0,211
	205	210	225	0,523	0,372	0,310	0,268	0,256	0,227	0,196	0,173	0,155	0,140	0,128	0,118	0,109	0,218	0,301	0,258	0,225	0,195
	210	215	230	0,486	0,346	0,288	0,249	0,238	0,211	0,182	0,161	0,144	0,130	0,119	0,110	0,101	0,203	0,279	0,239	0,209	0,181
	215	**220**	235	0,454	0,322	0,268	0,232	0,222	0,196	0,170	0,150	0,134	0,121	0,111	0,102	0,095	0,189	0,259	0,222	0,195	0,168
	220	225	**240**	0,424	0,301	0,251	0,217	0,207	0,183	0,159	0,140	0,125	0,113	0,104	0,095	0,088	0,177	0,242	0,207	0,181	0,157
	225	230	245	0,397	0,281	0,235	0,203	0,194	0,171	0,149	0,131	0,117	0,106	0,097	0,089	0,083	0,165	0,226	0,194	0,170	0,146
	230	235	250	0,373	0,264	0,220	0,191	0,182	0,161	0,139	0,123	0,110	0,100	0,091	0,084	0,078	0,155	0,212	0,182	0,159	0,137
	235	**240**	255	0,351	0,248	0,207	0,179	0,171	0,151	0,131	0,116	0,103	0,094	0,085	0,079	0,073	0,146	0,199	0,171	0,149	0,128
	240	245	**260**	0,331	0,234	0,195	0,169	0,161	0,142	0,123	0,109	0,097	0,088	0,080	0,074	0,069	0,137	0,187	0,160	0,140	0,121
	245	250	265	0,312	0,220	0,184	0,159	0,152	0,134	0,116	0,103	0,092	0,083	0,076	0,070	0,065	0,129	0,176	0,151	0,132	0,114
	250	255	270	0,295	0,208	0,174	0,150	0,143	0,127	0,110	0,097	0,087	0,079	0,072	0,066	0,061	0,122	0,167	0,143	0,125	0,107
	255	**260**	275	0,280	0,197	0,164	0,142	0,136	0,120	0,104	0,092	0,082	0,074	0,068	0,062	0,058	0,116	0,157	0,135	0,118	0,101
	260	265	**280**	0,265	0,187	0,156	0,135	0,129	0,114	0,099	0,087	0,078	0,070	0,064	0,059	0,055	0,110	0,149	0,128	0,112	0,096
	265	270	285	0,252	0,177	0,148	0,128	0,122	0,108	0,094	0,083	0,074	0,067	0,061	0,056	0,052	0,104	0,141	0,121	0,106	0,091
	270	275	290	0,239	0,169	0,140	0,122	0,116	0,103	0,089	0,078	0,070	0,064	0,058	0,053	0,049	0,099	0,134	0,115	0,101	0,086
	275	**280**	295	0,228	0,160	0,134	0,116	0,110	0,098	0,085	0,075	0,067	0,060	0,055	0,051	0,047	0,094	0,128	0,109	0,096	0,082
	280	285	**300**	0,217	0,153	0,127	0,110	0,105	0,093	0,081	0,071	0,064	0,058	0,053	0,048	0,045	0,090	0,122	0,104	0,091	0,078
	285	290		0,207	0,146	0,121	0,105	0,100	0,089	0,077	0,068	0,061	0,055	0,050	0,046	0,043	0,086	0,116	0,099	0,087	0,074
	290	295		0,198	0,139	0,116	0,100	0,096	0,085	0,073	0,065	0,058	0,052	0,048	0,044	0,041	0,082	0,111	0,095	0,083	0,071
	295	**300**		0,189	0,133	0,111	0,096	0,092	0,081	0,070	0,062	0,055	0,050	0,046	0,042	0,039	0,078	0,106	0,091	0,079	0,068
	300			0,181	0,127	0,106	0,092	0,088	0,078	0,067	0,059	0,053	0,048	0,044	0,040	0,037	0,075	0,101	0,087	0,076	0,065

Rotation spring stiffness Egcobox® type MM

	Egcobox type			MM10-K	MM20	MM25	MM30	MM35	MM45	MM50	MM55	MM60	MM65	MM70	MM75	MM80	MM80-K	MM110-K	MM120-K	MM130-K	MM150-K
	length of element [mm]			500	1000	1000	1000	1000	1000	1000	1000	1000	1000	1000	1000	1000	500	500	500	500	500
	concrete cover [mm]			Rotation spring stiffness [kNm/rad/Element]																	
	C30	C35	C50																		
height of connection [mm] good bonding conditions		**160**	175	765	1057	1269	1464	1535	1735	2003	2271	2537	2804	3069	3335	3600	1800	1272	1484	1696	1921
	160	165	**180**	856	1187	1424	1644	1723	1947	2249	2549	2848	3147	3446	3744	4041	2021	1434	1673	1912	2172
	165	170	185	953	1324	1589	1834	1922	2172	2509	2844	3178	3511	3844	4176	4508	2254	1606	1873	2141	2439
	170	175	190	1055	1468	1762	2034	2132	2410	2783	3154	3525	3894	4263	4632	5001	2500	1787	2085	2382	2720
	175	**180**	195	1162	1620	1945	2245	2352	2659	3071	3481	3890	4297	4705	5112	5518	2759	1978	2307	2637	3017
	180	185	**200**	1274	1780	2136	2466	2584	2921	3373	3824	4273	4721	5168	5615	6062	3031	2178	2542	2905	3330
	185	190	205	1391	1947	2337	2697	2827	3195	3690	4182	4673	5164	5653	6142	6631	3315	2389	2787	3185	3658
	190	195	210	1514	2121	2546	2939	3080	3482	4021	4557	5092	5627	6160	6693	7225	3613	2609	3044	3478	4001
	195	**200**	215	1642	2303	2765	3191	3344	3780	4366	4948	5529	6109	6688	7267	7845	3923	2839	3312	3785	4360
	200	205	**220**	1775	2493	2992	3453	3619	4091	4725	5355	5984	6612	7239	7865	8490	4245	3078	3591	4104	4734
	205	210	225	1913	2690	3229	3726	3905	4415	5098	5779	6457	7134	7811	8486	9161	4581	3327	3882	4436	5123
	210	215	230	2056	2894	3474	4009	4202	4750	5486	6218	6948	7677	8404	9131	9858	4929	3586	4184	4781	5528
	215	**220**	235	2204	3106	3728	4303	4510	5098	5887	6673	7457	8239	9020	9800	10580	5290	3855	4497	5139	5948
	220	225	**240**	2358	3326	3992	4607	4829	5458	6303	7145	7984	8821	9657	10493	11327	5664	4133	4822	5510	6384
	225	230	245	2516	3553	4264	4921	5158	5831	6734	7632	8529	9423	10316	11209	12100	6050	4421	5157	5894	6835
	230	235	250	2680	3787	4546	5246	5498	6216	7178	8136	9091	10045	10997	11948	12899	6449	4718	5505	6291	7302
	235	**240**	255	2849	4029	4836	5581	5850	6613	7636	8656	9672	10686	11699	12711	13723	6861	5026	5863	6701	7783
	240	245	**260**	3024	4278	5135	5927	6212	7022	8109	9192	10271	11348	12424	13498	14572	7286	5343	6233	7123	8281
	245	250	265	3203	4535	5444	6283	6585	7444	8596	9743	10888	12029	13170	14309	15447	7724	5669	6614	7559	8793
	250	255	270	3388	4800	5761	6649	6969	7878	9097	10311	11522	12731	13938	15143	16348	8174	6006	7007	8008	9321
	255	**260**	275	3577	5072	6087	7026	7364	8324	9613	10896	12175	13452	14727	16001	17274	8637	6352	7410	8469	9865
	260	265	**280**	3772	5351	6423	7413	7769	8782	10142	11496	12846	14193	15538	16882	18225	9113	6708	7825	8943	10423
	265	270	285	3972	5638	6767	7810	8186	9253	10686	12112	13534	14954	16371	17787	19202	9601	7073	8252	9431	10998
	270	275	290	4178	5932	7120	8218	8613	9736	11244	12744	14241	15734	17226	18716	20205	10102	7448	8689	9931	11587
	275	**280**	295	4388	6234	7483	8636	9051	10232	11816	13393	14966	16535	18103	19668	21233	10617	7833	9138	10444	12192
	280	285	**300**	4604	6543	7854	9065	9500	10740	12402	14057	15708	17356	19001	20644	22287	11143	8228	9599	10970	12813
	285	290		4824	6860	8234	9503	9960	11260	13003	14738	16469	18196	19921	21644	23366	11683	8632	10070	11509	13448
	290	295		5050	7184	8624	9953	10431	11792	13617	15435	17247	19056	20863	22667	24470	12235	9046	10553	12061	14099
	295	**300**		5281	7516	9022	10412	10913	12336	14246	16148	18044	19936	21826	23714	25600	12800	9469	11048	12626	14766
	300			5518	7856	9429	10882	11406	12893	14889	16877	18858	20836	22811	24784	26756	13378	9903	11553	13204	15448

On-site reinforcement Egcobox® type MM - C20/25

Egcobox type	MM10-K	MM20	MM25	MM30	MM35	MM45	MM50	MM55	MM60	MM65	MM70	MM75	MM80	MM80-K	MM110-K	MM120-K	MM130-K	MM150-K
length of element [mm]	**500**	**1000**	**1000**	**1000**	**1000**	**1000**	**1000**	**1000**	**1000**	**1000**	**1000**	**1000**	**1000**	**500**	**500**	**500**	**500**	**500**
Egcobox ø rebar [mm]	ø 8	ø 12	ø 12	ø 12	ø 12	ø 12	ø 12	ø 12	ø 12	ø 12	ø 12	ø 12	ø 12	ø 12	ø 14	ø 14	ø 14	ø 16
Egcobox l_0 rebar [mm]	475	580	580	580	580	580	580	580	580	580	580	580	580	580	720	720	720	1190
item ① - lapping reinforcement / element																		
≥ a_s [cm²] B500	2,43	3,91	4,89	5,87	5,87	6,85	7,83	8,81	9,79	10,76	11,74	12,67	13,41	6,57	8,02	8,94	9,66	14,07
suggested on-site reinforcement [mm]	ø 10	ø 12	ø 12	ø 12	ø 12	ø 12	ø 12	ø 12	ø 12	ø 12	ø 12	ø 12	ø 12	ø 12	ø 14	ø 14	ø 14	ø 16
item ② - suspension reinforcement shear force / element																		
shear force level VS ≥ a_s [cm²] B500	0,56	1,12	1,12	1,12	1,12	1,12	1,12	1,12	1,12	1,12	1,12	1,12	1,12	0,96	0,96	0,96	0,96	0,96
shear force level V1 ≥ a_s [cm²] B500	0,86	1,72	1,72	1,72	1,72	1,72	1,72	1,72	1,72	1,72	1,72	1,72	1,72	1,72	1,72	1,72	1,72	1,72
shear force level V2 ≥ a_s [cm²] B500	1,29	2,57	2,57	2,57	2,57	2,57	2,57	2,57	2,57	2,57	2,57	2,57	2,57	2,68	2,57	2,57	2,57	2,57
shear force level V3 ≥ a_s [cm²] B500	1,72	3,43	3,43	3,43	3,43	3,43	3,43	3,43	3,43	3,43	3,43	3,43	3,43	-	-	-	-	-
shear force level V4 ≥ a_s [cm²] B500	-	5,36	5,36	5,36	5,36	5,36	5,36	5,36	5,36	5,36	5,36	5,36	5,36	3,35	3,35	3,35	3,35	3,35
shear force level VS± ≥ a_s [cm²] B500	-	1,12	1,12	1,12	1,12	1,12	1,12	1,12	1,12	1,12	1,12	1,12	1,12	0,96	0,96	0,96	0,96	0,96
shear force level V1± ≥ a_s [cm²] B500	-	1,72	1,72	1,72	1,72	1,72	1,72	1,72	1,72	1,72	1,72	1,72	1,72	1,72	1,72	1,72	1,72	1,72
shear force level V2± ≥ a_s [cm²] B500	-	2,57	2,57	2,57	2,57	2,57	2,57	2,57	2,57	2,57	2,57	2,57	2,57	2,68	2,57	2,57	2,57	2,57
shear force level V3± ≥ a_s [cm²] B500	-	3,43	3,43	3,43	3,43	3,43	3,43	3,43	3,43	3,43	3,43	3,43	3,43	-	-	-	-	-
shear force level V4± ≥ a_s [cm²] B500	-	5,36	5,36	5,36	5,36	5,36	5,36	5,36	5,36	5,36	5,36	5,36	5,36	3,35	3,35	3,35	3,35	3,35
shear force level V6± ≥ a_s [cm²] B500	0,56	1,12	1,12	1,12	1,12	1,12	1,12	1,12	1,12	1,12	1,12	1,12	1,12	0,56	0,96	0,96	0,96	0,96
shear force level V7± ≥ a_s [cm²] B500	0,96	1,93	1,93	1,93	1,93	1,93	1,93	2,57	2,57	2,57	2,57	2,57	2,57	1,29	2,57	2,57	2,57	2,57
shear force level V8± ≥ a_s [cm²] B500	2,01	4,02	4,02	4,02	4,02	4,02	4,02	4,02	4,02	4,02	4,02	4,02	4,02	2,01	3,35	3,35	3,35	3,35

item ③+④ - structural reinforcement
In the slab edge of the u-bar reinforcement is respectively to arrange ≥ ø8 (item ③).
On the balcony side, it is recommended to design the edge reinforcement for the shear force V_{Ed} / f_{yd} ≥ ø6/250 mm according to EN 1992 (item ④ - vs. item ②).

The suggested lapping reinforcement (α_6=1,5) is selected (item ①) to transfer 100% of the M_{Rd} of the Egcobox® (height Egcobox® = height floor). An other reinforcement selection is possible.
In case of an other reinforcement selection shall be approved the lapping reinforcement in accordance with EN 1992. The reinforcement cross section or the lapping length can be derated in reference of utilization proportional M_{Ed} / M_{Rd}.
The lapping reinforcement must be approved by the structural engineer.

The proposed steel cross-section a_s (item ②) covers the maximum design transverse force V_{Rd} of the Egcobox®. In case of smaller actions, the edge reinforcement may be determined with V_{Ed} / f_{yd} ≥ ø6/250 mm.

The specifications apply to good bonding conditions.

design proposal

direct support

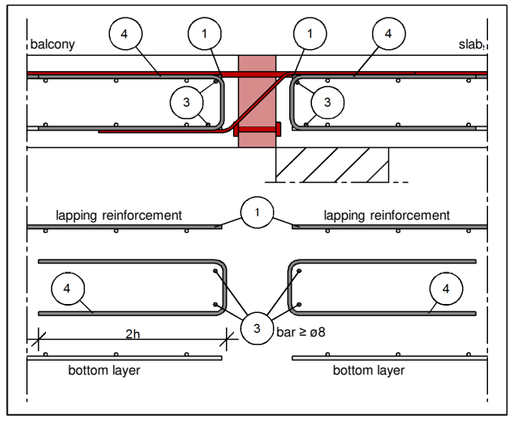

direct support (semi-prefab slab)

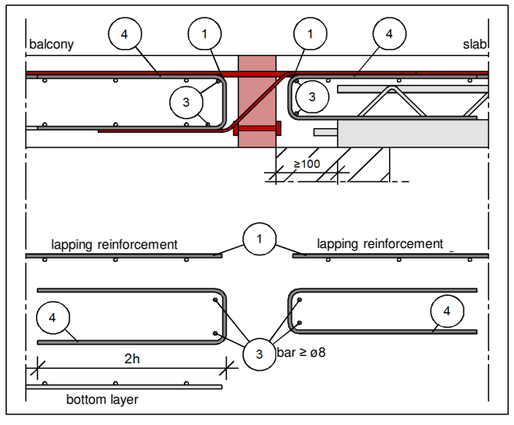

direct support with alternating shear force (V6±, V7±, V8±)

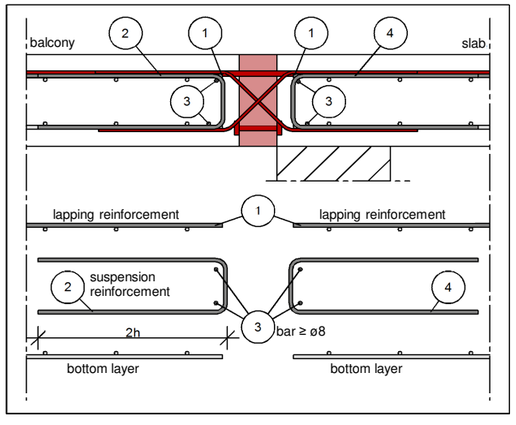

For the Egcobox shear force levels VS± to V4±, a constructive edging on the balcony side is generally sufficient.

design proposal

indirect support

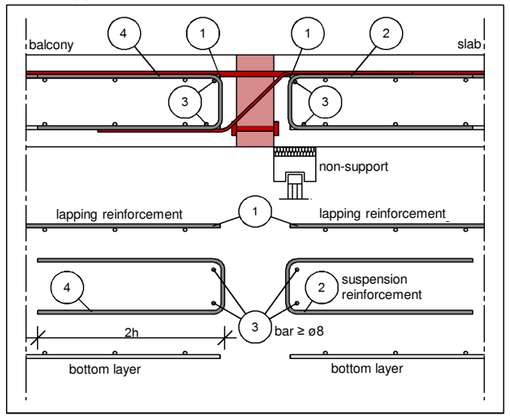

indirect support (semi-prefab slab)

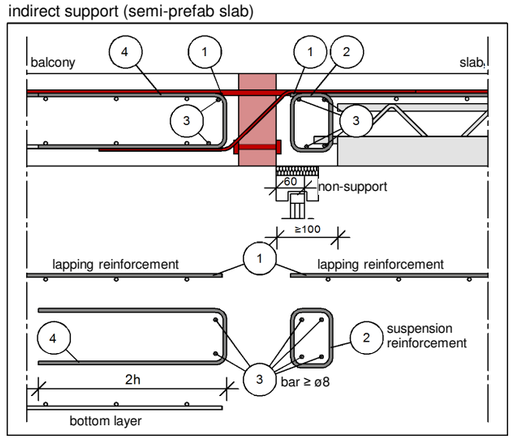

Note indirect support (semi-prefab slab):
The adviced u-bar reinforcement item ② is not replacing the required statical reinforcement of the beam. The reinforcement of the beam has to be calculated by the project engineer in additional.

Semi-prefab balcony
direct support: Egcobox in semi-prefab balcony

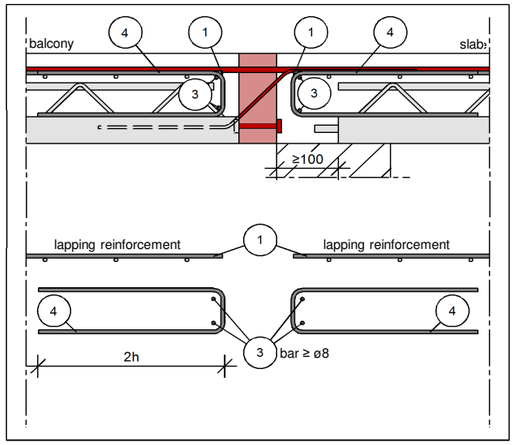

direct support: Egcobox with V_± in semi-prefab balcony

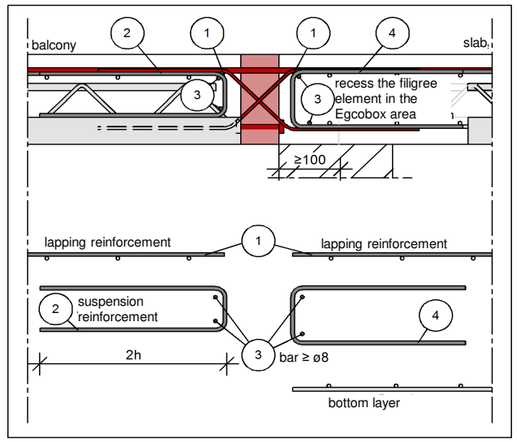

indirect support: Egcobox with V_± in semi-prefab balcony

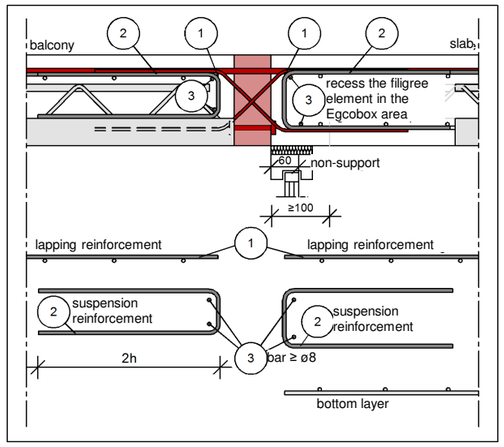

Note Egcobox in semi-prefab balcony:
It is advisable to include the constructive edging on the balcony side (item ④) or the suspension reinforcement (item ②) in the semi-prefab part.
For the Egcobox shear force levels VS± to V4±, a constructive edging on the balcony side is generally sufficient.

On-site reinforcement Egcobox® type MM - C20/25

for balconies with low offset of height

marginal conditions for execution:

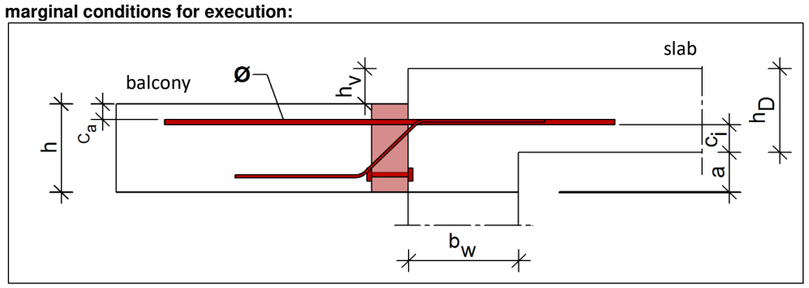

offset of height $h_v < h_D - c_a - d_s - c_i$

If $h_v \leq h_D - c_a - d_s - c_i$, the offset of height balcony can execute with a standard Egcobox®-element MM.

If the marginal conditions do not match, the Egcobox® should be designed with a offset of height MM-HV.

required minimum width of the joist b_W : 175 mm MM10-K bis MM60,
220 mm MM65 bis MM80-K

Egcobox type			MM10-K	MM20	MM25	MM30	MM35	MM45	MM50	MM55	MM60	MM65	MM70	MM75	MM80	MM80-K
length of element [mm]			**500**	**1000**	**1000**	**1000**	**1000**	**1000**	**1000**	**1000**	**1000**	**1000**	**1000**	**1000**	**1000**	**500**
reqired minimum width of joist **b_w** [mm]			175	175	175	175	175	175	175	175	175	220	220	220	220	220
Egcobox ø rebar [mm]			ø 8	ø 12	ø 12	ø 12	ø 12	ø 12	ø 12	ø 12	ø 12	ø 12	ø 12	ø 12	ø 12	ø 12
Egcobox l_0 rebar [mm]			475	580	580	580	580	580	580	580	580	580	580	580	580	580
item ① - lapping reinforcement / element																
≥ as [cm²] B500			2,43	3,91	4,89	5,87	5,87	6,85	7,83	8,81	9,79	10,76	11,74	12,67	13,41	6,57
suggested on-site reinforcement [mm]			ø 10	ø 12	ø 12	ø 12	ø 12	ø 12	ø 12	ø 12	ø 12	ø 12	ø 12	ø 12	ø 12	ø 12
item ⑤ - link reinforcement slabsides / element at <u>direct support</u> (all shear force level - a_s lapping reinforcement)																
offset height	**a= 50 mm**	≥ a_s [cm²] B500	0,67	1,12	1,35	1,63	1,63	1,90	2,19	2,46	2,74	2,28	2,48	2,69	2,85	1,40
offset height	**a= 100 mm**	≥ a_s [cm²] B500	1,63	2,62	3,28	3,96	3,96	4,62	5,32	5,98	6,65	5,53	6,03	6,54	6,92	3,39
offset height	**a= 200 mm**	≥ a_s [cm²] B500	3,54	5,71	7,13	8,62	8,62	10,06	11,58	13,02	14,47	12,03	13,12	14,23	15,06	7,38
item ⑥ - link reinforcement / element at <u>indirect support</u> (a_s lapping reinforcement + a_s transverse shear force)																
shear force	**a= 50 mm**		1,12+0,48	1,12+0,96	1,35+0,96	1,63+0,96	1,63+0,96	1,90+0,96	2,19+0,96	2,46+0,96	2,74+0,96	2,28+0,96	2,48+0,96	2,69+0,96	2,85+0,96	1,40+0,96
level	**a= 100 mm**	≥ a_s [cm²] B500	1,63+0,48	2,62+0,96	3,28+0,96	3,96+0,96	3,96+0,96	4,62+0,96	5,32+0,96	5,98+0,96	6,65+0,96	5,53+0,96	6,03+0,96	6,54+0,96	6,92+0,96	3,39+0,96
VS / VS±	**a= 200 mm**		3,54+0,48	5,71+0,96	7,13+0,96	8,62+0,96	8,62+0,96	10,06+0,96	11,58+0,96	13,02+0,96	14,47+0,96	12,03+0,96	13,12+0,96	14,23+0,96	15,06+0,96	7,38+0,96
shear force	**a= 50 mm**		1,12+0,86	1,12+1,72	1,35+1,72	1,63+1,72	1,63+1,72	1,90+1,72	2,19+1,72	2,46+1,72	2,74+1,72	2,28+1,72	2,48+1,72	2,69+1,72	2,85+1,72	1,40+1,72
level	**a= 100 mm**	≥ a_s [cm²] B500	1,63+0,86	2,62+1,72	3,28+1,72	3,96+1,72	3,96+1,72	4,62+1,72	5,32+1,72	5,98+1,72	6,65+1,72	5,53+1,72	6,03+1,72	6,54+1,72	6,92+1,72	3,39+1,72
V1 / V1±	**a= 200 mm**		3,54+0,86	5,71+1,72	7,13+1,72	8,62+1,72	8,62+1,72	10,06+1,72	11,58+1,72	13,02+1,72	14,47+1,72	12,03+1,72	13,12+1,72	14,23+1,72	15,06+1,72	7,38+1,72
shear force	**a= 50 mm**		1,12+1,29	1,12+2,57	1,35+2,57	1,63+2,57	1,63+2,57	1,90+2,57	2,19+2,57	2,46+2,57	2,74+2,57	2,28+2,57	2,48+2,57	2,69+2,57	2,85+2,57	1,40+2,68
level	**a= 100 mm**	≥ a_s [cm²] B500	1,63+1,29	2,62+2,57	3,28+2,57	3,96+2,57	3,96+2,57	4,62+2,57	5,32+2,57	5,98+2,57	6,65+2,57	5,53+2,57	6,03+2,57	6,54+2,57	6,92+2,57	3,39+2,68
V2 / V2±	**a= 200 mm**		3,54+1,29	5,71+2,57	7,13+2,57	8,62+2,57	8,62+2,57	10,06+2,57	11,58+2,57	13,02+2,57	14,47+2,57	12,03+2,57	13,12+2,57	14,23+2,57	15,06+2,57	7,38+2,68
shear force	**a= 50 mm**		1,12+1,72	1,12+3,43	1,35+3,43	1,63+3,43	1,63+3,43	1,90+3,43	2,19+3,43	2,46+3,43	2,74+3,43	2,28+3,43	2,48+3,43	2,69+3,43	2,85+3,43	-
level	**a= 100 mm**	≥ a_s [cm²] B500	1,63+1,72	2,62+3,43	3,28+3,43	3,96+3,43	3,96+3,43	4,62+3,43	5,32+3,43	5,98+3,43	6,65+3,43	5,53+3,43	6,03+3,43	6,54+3,43	6,92+3,43	-
V3 / V3±	**a= 200 mm**		3,54+1,72	5,71+3,43	7,13+3,43	8,62+3,43	8,62+3,43	10,06+3,43	11,58+3,43	13,02+3,43	14,47+3,43	12,03+3,43	13,12+3,43	14,23+3,43	15,06+3,43	-
shear force	**a= 50 mm**		-	1,12+5,36	1,35+5,36	1,63+5,36	1,63+5,36	1,90+5,36	2,19+5,36	2,46+5,36	2,74+5,36	2,28+5,36	2,48+5,36	2,69+5,36	2,85+5,36	1,40+2,68
level	**a= 100 mm**	≥ a_s [cm²] B500	-	2,62+5,36	3,28+5,36	3,96+5,36	3,96+5,36	4,62+5,36	5,32+5,36	5,98+5,36	6,65+5,36	5,53+5,36	6,03+5,36	6,54+5,36	6,92+5,36	3,39+2,68
V4 / V4±	**a= 200 mm**		-	5,71+5,36	7,13+5,36	8,62+5,36	8,62+5,36	10,06+5,36	11,58+5,36	13,02+5,36	14,47+5,36	12,03+5,36	13,12+5,36	14,23+5,36	15,06+5,36	7,38+2,68
shear force	**a= 50 mm**		1,12+0,48	1,12+0,96	1,35+0,96	1,63+0,96	1,63+0,96	1,90+0,96	2,19+0,96	2,46+0,96	2,74+0,96	2,28+0,96	2,48+0,96	2,69+0,96	2,85+0,96	1,40+0,48
level	**a= 100 mm**	≥ a_s [cm²] B500	1,63+0,48	2,62+0,96	3,28+0,96	3,96+0,96	3,96+0,96	4,62+0,96	5,32+0,96	5,98+0,96	6,65+0,96	5,53+0,96	6,03+0,96	6,54+0,96	6,92+0,96	3,39+0,48
V6±	**a= 200 mm**		3,54+0,48	5,71+0,96	7,13+0,96	8,62+0,96	8,62+0,96	10,06+0,96	11,58+0,96	13,02+0,96	14,47+0,96	12,03+0,96	13,12+0,96	14,23+0,96	15,06+0,96	7,38+0,48
shear force	**a= 50 mm**		1,12+0,96	1,12+1,93	1,35+1,93	1,63+1,93	1,63+1,93	1,90+1,93	2,19+1,93	2,46+1,93	2,74+1,93	2,28+1,93	2,48+1,93	2,69+1,93	2,85+1,93	1,40+1,29
level	**a= 100 mm**	≥ a_s [cm²] B500	1,63+0,96	2,62+1,93	3,28+1,93	3,96+1,93	3,96+1,93	4,62+1,93	5,32+1,93	5,98+1,93	6,65+1,93	5,53+1,93	6,03+1,93	6,54+1,93	6,92+1,93	3,39+1,29
V7±	**a= 200 mm**		3,54+0,96	5,71+1,93	7,13+1,93	8,62+1,93	8,62+1,93	10,06+1,93	11,58+1,93	13,02+1,93	14,47+1,93	12,03+1,93	13,12+1,93	14,23+1,93	15,06+1,93	7,38+1,29
shear force	**a= 50 mm**		1,12+2,01	1,12+4,02	1,35+4,02	1,63+4,02	1,63+4,02	1,90+4,02	2,19+4,02	2,46+4,02	2,74+4,02	2,28+4,02	2,48+4,02	2,69+4,02	2,85+4,02	1,40+2,01
level	**a= 100 mm**	≥ a_s [cm²] B500	1,63+2,01	2,62+4,02	3,28+4,02	3,96+4,02	3,96+4,02	4,62+4,02	5,32+4,02	5,98+4,02	6,65+4,02	5,53+4,02	6,03+4,02	6,54+4,02	6,92+4,02	3,39+2,01
V8±	**a= 200 mm**		3,54+2,01	5,71+4,02	7,13+4,02	8,62+4,02	8,62+4,02	10,06+4,02	11,58+4,02	13,02+4,02	14,47+4,02	12,03+4,02	13,12+4,02	14,23+4,02	15,06+4,02	7,38+2,01

item ③+④ - structural reinforcement
In the slab edge of the u-bar reinforcement is respectively to arrange ≥ ø8 (item ③).
On the balcony side, it is recommended to design the edge reinforcement for the shear force V_{Ed} / f_{yd} ≥ ø6/250 mm according to EN 1992 (item ④ - vs. item ②).

The suggested lapping reinforcement (α_6=1,5) is selected (item ①) to transfer 100% of the M_{Rd} of the Egcobox℠ (height Egcobox℠ = height floor). An other reinforcement selection is possible.
In case of an other reinforcement selection shall be approved the lapping reinforcement in accordance with EN 1992. The reinforcement cross section or the lapping length can be derated in reference of utilization proportional M_{Ed} / M_{Rd}.
The lapping reinforcement must be approved by the structural engineer.

The proposed steel cross-section a_s (item ②) covers the maximum design transverse force V_{Rd} of the Egcobox℠. In case of smaller actions, the edge reinforcement may be determined with V_{Ed} / f_{yd} ≥ ø6/250 mm.

Item ⑤ or item ⑥ applies to the specified required minimum widths of the joist (b_w) and the height of the offset (a= 50 mm; a=100 mm; a= 200 mm). For larger beam widths, a reduction of the required reinforcement is possible.
For balcony offset dimensions between 20 mm < a ≤ 230 mm, interpolation is possible; recommended minimum reinforcement ø6/250 mm.
For offset dimensions < 20 mm, item ⑤ or ⑥ can be reduced to a structural edge reinforcement (direct bearing - item ④) or suspension reinforcement (indirect bearing - item ②).

The specified connection reinforcement is to be used exclusively for The force transmission into the slab and the reinforcement required for this (item ⑧) must be verified by the structural engineer.

The specifications apply to good bonding conditions.

The specified connection reinforcement is required exclusively for the static transfer of the cutting forces from the cantilever slab connection.
The statically required beam-reinforcement is not taken into account and shown. This must be additionally dimensioned by the structural engineer.
The specified connection reinforcement is only a suggestion. The structural engineer in charge must check the feasibility of the design.
The distribution of the Egcobox℠ reinforcement and the required minimum beam widths must be observed. In the case of alternating shear forces, the embedment length of the shear force bar must be taken into account when selecting the beam width.

design proposal

direct support

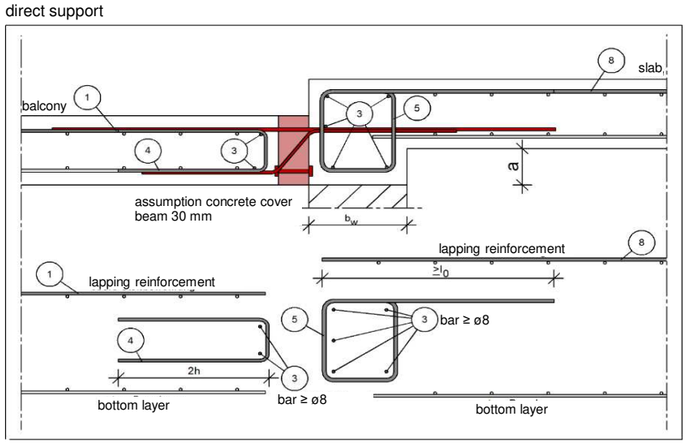

indirect support

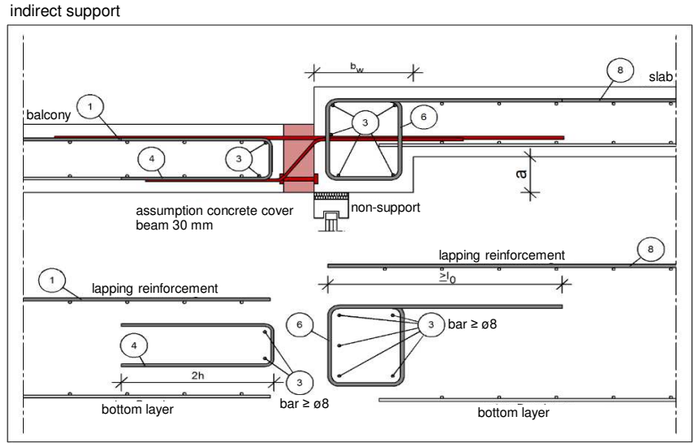

instruction notes lapping reinforcement

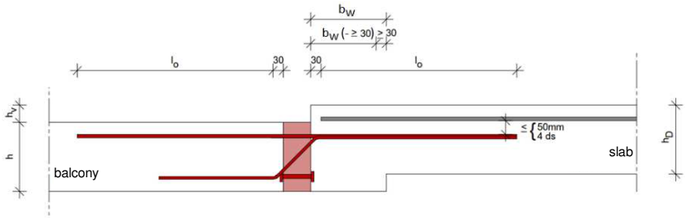

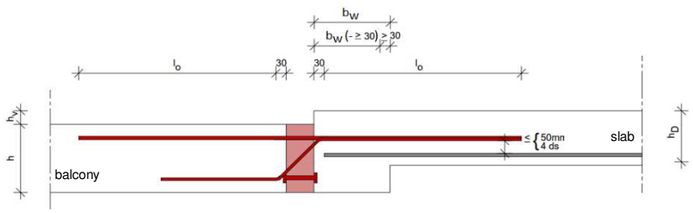

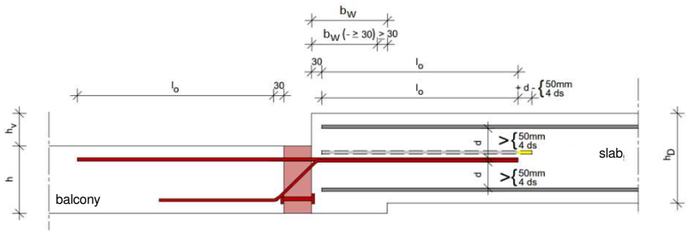

Design table Egcobox® type MM-CO - C20/25

for cantilever slabs for transmission of moment and shear force in corner situation, insulation 80 mm

	Egcobox type			MM10-CO-L or MM10-CO-R		MM20-CO-L or MM20-CO-R		MM30-CO-L or MM30-CO-R	
	length of element [mm]			500	580	500	580	600	680
	concrete cover [mm] 1. layer (2. layer)			consists of subcomponents: MM10-CO-S1L or MM10-CO-S1R 1. layer	MM10-CO-S2R or MM10-CO-S2L 2. layer	consists of subcomponents: MM20-CO-S1L or MM20-CO-S1R 1. layer	MM20-CO-S2R or MM20-CO-S2L 2. layer	consists of subcomponents: MM30-CO-S1L or MM30-CO-S1R 1. layer	MM30-CO-S2R or MM30-CO-S2L 2. layer
	C30 (C45)	C35 (C50)	C50 (C65)	M_{Rd} [kNm/element]					
height of connection [mm] good bonding conditions		**160**	175	-	-	-	-	-	-
	160	165	**180**	-	-	-	-	-	-
	165	170	185	-	-	-	-	-	-
	170	175	190	-16,8	-14,3	-24,8	-23,0	-30,5	-27,8
	175	**180**	195	-17,7	-15,1	-26,2	-24,4	-32,2	-29,5
	180	185	**200**	-18,6	-16,0	-27,6	-25,8	-33,8	-31,2
	185	190	205	-19,4	-16,8	-29,0	-27,2	-35,5	-32,9
	190	195	210	-20,3	-17,7	-30,4	-28,6	-37,2	-34,6
	195	**200**	215	-21,1	-18,6	-31,8	-30,0	-38,9	-36,3
	200	205	**220**	-22,0	-19,4	-33,2	-31,5	-40,6	-38,0
	205	210	225	-22,8	-20,3	-34,6	-32,9	-42,3	-39,7
	210	215	230	-23,7	-21,1	-36,0	-34,3	-44,0	-41,4
	215	**220**	235	-24,5	-22,0	-37,4	-35,7	-45,7	-43,1
	220	225	**240**	-25,4	-22,8	-38,8	-37,1	-47,4	-44,8
	225	230	245	-26,2	-23,7	-40,2	-38,5	-49,1	-46,5
	230	235	250	-27,1	-24,5	-41,6	-39,9	-50,8	-48,2
	235	**240**	255	-27,9	-25,4	-43,0	-41,3	-52,5	-49,9
	240	245	**260**	-28,8	-26,2	-44,4	-42,7	-54,2	-51,6
	245	250	265	-29,6	-27,1	-45,9	-44,1	-55,9	-53,3
	250	255	270	-30,5	-27,9	-47,3	-45,5	-57,6	-55,0
	255	**260**	275	-31,3	-28,8	-48,7	-46,9	-59,3	-56,7
	260	265	**280**	-32,2	-29,6	-50,1	-48,3	-61,0	-58,4
	265	270	285	-33,0	-30,5	-51,5	-49,7	-62,7	-60,1
	270	275	290	-33,9	-31,3	-52,9	-51,1	-64,4	-61,8
	275	**280**	295	-34,7	-32,2	-54,3	-52,5	-66,1	-63,5
	280	285	**300**	-35,6	-33,0	-55,7	-54,0	-67,8	-65,2
	285	290		-36,4	-33,9	-57,1	-55,4	-69,5	-66,9
	290	295		-37,3	-34,7	-58,5	-56,8	-71,2	-68,6
	295	**300**		-38,1	-35,6	-59,9	-58,2	-72,9	-70,3
	300			-39,0	-36,4	-61,3	-59,6	-74,6	-72,0

Shear force level		concrete cover [mm] 30 (C45)	35 (C50)	50 (C65)	V_{Rd} [kN/element]					
height of connection [mm] good bonding conditions	VS	170-185	175-190	190-205	55,9	55,9	55,9	55,9	55,9	55,9
		190-205	195-210	210-225	55,9	55,9	55,9	55,9	55,9	55,9
		210-300	215-300	230-300	55,9	55,9	55,9	55,9	55,9	55,9
	V1	170-185	175-190	190-205	82,4	82,4	82,4	82,4	82,4	82,4
		190-205	195-210	210-225	116,5	116,5	116,5	116,5	116,5	116,5
		210-300	215-300	230-300	116,5	116,5	116,5	116,5	116,5	116,5
	V2	170-185	175-190	190-205	-	-	-	-	-	-
		190-205	195-210	210-225	170,6	170,6	170,6	170,6	170,6	170,6
		210-300	215-300	230-300	170,6	170,6	170,6	170,6	170,6	170,6

The choice of the Egcobox® as a complete element, the specification of the concrete cover of the 1st layer is decisive, e.g. MM20-CO-L-VS-C35-h200, consisting of subcomponents MM20-CO-S1L-VS-C35-h200, MM20-CO-S2R-VS-C50-h200; or MM20-CO-R-VS-C35-h200, consisting of subcomponents MM20-CO-S1R-VS-C35-h200, MM20-CO-S2L-VS-C50-h200. "L" and "R" indicate the arrangement of the 1st layer (arrangement of 1st layer left or right of the corner). The Egcobox® corner elements can be planned as a complete element or, for example, as a partial element for centered load requirements.

Reinforcement Egcobox® type MM-CO

Egcobox type	MM10-CO-L or MM10-CO-R		MM20-CO-L or MM20-CO-R		MM30-CO-L or MM30-CO-R	
length of element [mm]	**500**	**580**	**500**	**580**	**600**	**680**
	consists of subcomponents:		consists of subcomponents:		consists of subcomponents:	
	MM10-CO-S1L or MM10-CO-S1R 1. layer	MM10-CO-S2R or MM10-CO-S2L 2. layer	MM20-CO-S1L or MM20-CO-S1R 1. layer	MM20-CO-S2R or MM20-CO-S2L 2. layer	MM30-CO-S1L or MM30-CO-S1R 1. layer	MM30-CO-S2R or MM30-CO-S2L 2. layer
tensile bars	4 ø 12	4 ø 12	5 ø 14	5 ø 14	6 ø 14	6 ø 14
length of tensile bars [mm]	1300	1300	1580	1580	1580	1580
compression bearings	4 ø 12	4 ø 12	2 ø 12	2 ø 12	3 ø 12	3 ø 12
compression bars	-	-	3 ø 14	3 ø 14	3 ø 14	3 ø 14
length of compression bars [mm]	-	-	1580	1580	1580	1580
shear force bars VS	3 ø 8	3 ø 8	3 ø 8	3 ø 8	3 ø 8	3 ø 8
shear force bars V1	4 ø 10	4 ø 10	4 ø 10	4 ø 10	4 ø 10	4 ø 10
shear force bars V2	6 ø 10	6 ø 10	6 ø 10	6 ø 10	6 ø 10	6 ø 10
applicable expansion joint distances [m]	**11,7 / 2**	**11,7 / 2**	**11,7 / 2**	**11,7 / 2**	**11,7 / 2**	**11,7 / 2**

Placement

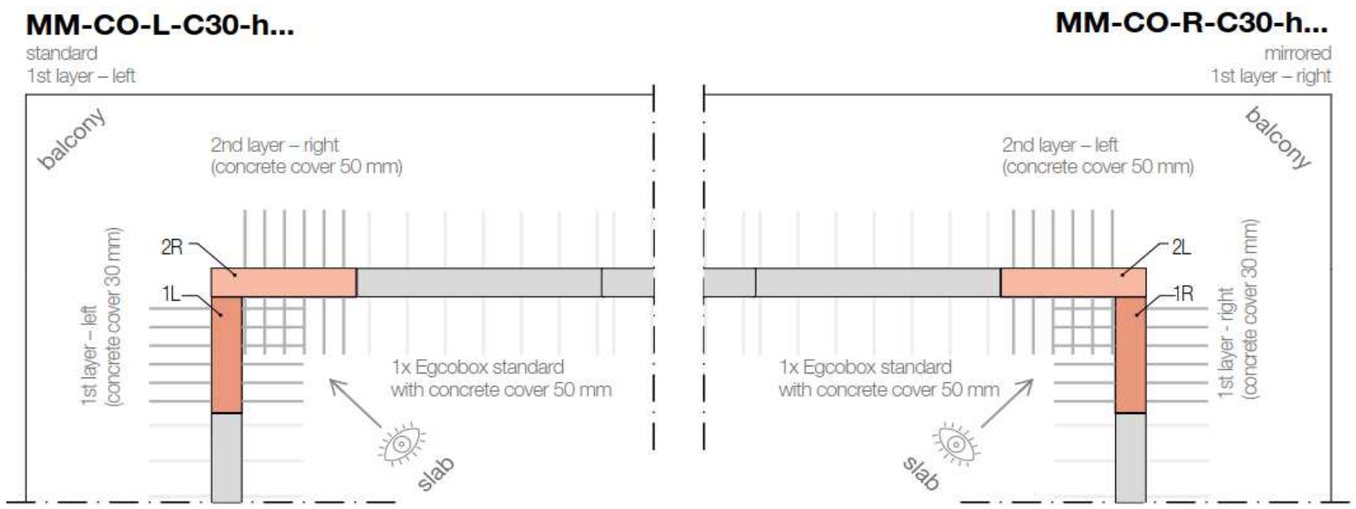

On-site reinforcement Egcobox® type MM-CO - C20/25

Egcobox type	MM10-CO-L or MM10-CO-R		MM20-CO-L or MM20-CO-R		MM30-CO-L or MM30-CO-R	
length of element [mm]	**500**	**580**	**500**	**580**	**600**	**680**
	consists of subcomponents:		consists of subcomponents:		consists of subcomponents:	
	MM10-CO-S1L or MM10-CO-S1R 1. layer	MM10-CO-S2R or MM10-CO-S2L 2. layer	MM20-CO-S1L or MM20-CO-S1R 1. layer	MM20-CO-S2R or MM20-CO-S2L 2. layer	MM30-CO-S1L or MM30-CO-S1R 1. layer	MM30-CO-S2R or MM30-CO-S2L 2. layer
Egcobox ø rebar [mm]	ø 12	ø 12	ø 14	ø 14	ø 14	ø 14
Egcobox l_0 rebar [mm]	580	580	720	720	720	720
item ① - lapping reinforcement / element						
≥ a_s [cm²] B500	3,91	3,91	6,47	6,47	7,81	7,81
suggested on-site reinforcement [mm]	ø 12	ø 12	ø 14	ø 14	ø 14	ø 14
item ② - suspension reinforcement shear force / element						
shear force level VS ≥ a_s [cm²] B500	1,29	1,29	1,29	1,29	1,29	1,29
shear force level V1 ≥ a_s [cm²] B500	2,68	2,68	2,68	2,68	2,68	2,68
shear force level V2 ≥ a_s [cm²] B500	3,92	3,92	3,92	3,92	3,92	3,92

item ③+④ - structural reinforcement
In the slab edge of the u-bar reinforcement is respectively to arrange ≥ ø8 (item ③).
On the balcony side, it is recommended to design the edge reinforcement for the shear force V_{Ed} / f_{yd} ≥ ø6/250 mm according to EN 1992 (item ④ - vs. item ②).

The suggested lapping reinforcement (α_6=1,5) is selected (item ①) to transfer 100% of the M_{Rd} of the Egcobox® (height Egcobox® = height floor). An other reinforcement selection is possible.
In case of an other reinforcement selection shall be approved the lapping reinforcement in accordance with EN 1992. The reinforcement cross section or the lapping length can be derated in reference of utilization proportional M_{Ed} / M_{Rd}.
The lapping reinforcement must be approved by the structural engineer.

The proposed steel cross-section a_s (item ②) covers the maximum design transverse force V_{Rd} of the Egcobox®. In case of smaller actions, the edge reinforcement may be determined with V_{Ed} / f_{yd} ≥ ø6/250 mm.

The specifications apply to good bonding conditions.

design proposal

top view

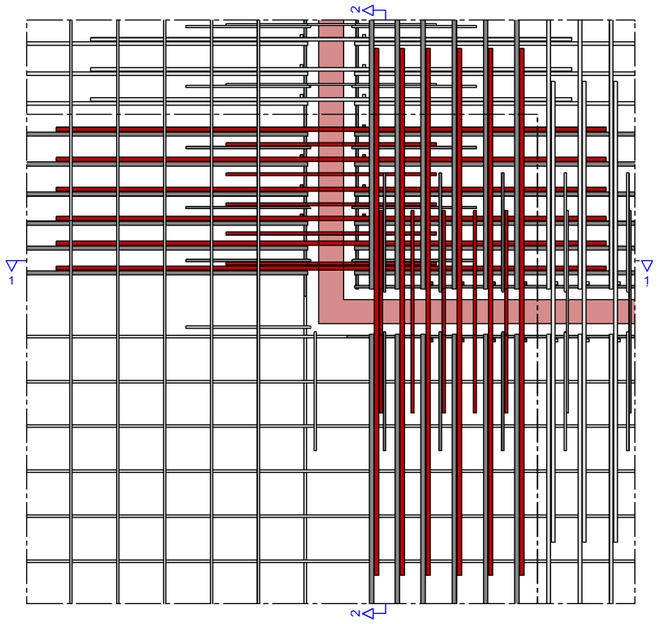

section 1-1; direct support

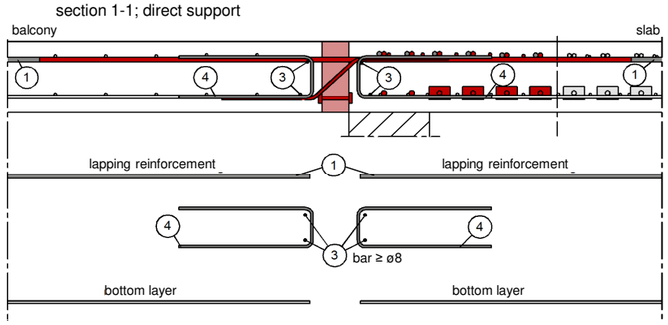

section 2-2; direct support

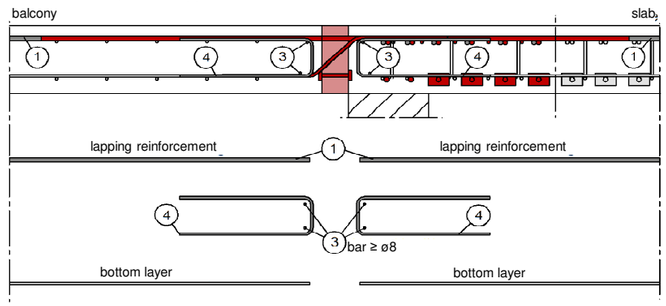

section 1-1; indirect support

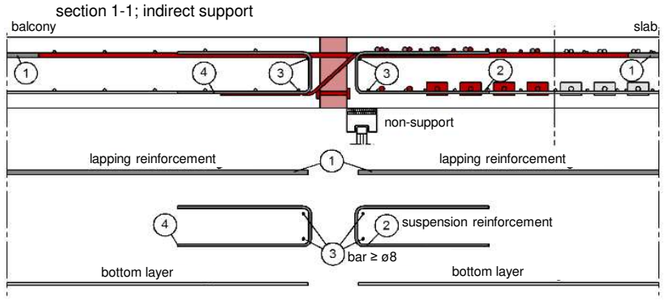

section 2-2; indirect support

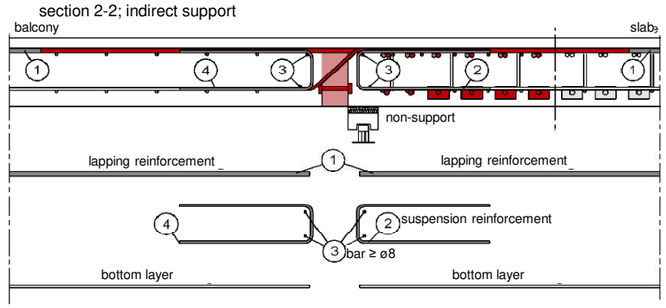

Design table Egcobox® type MM-HVS / -WOS - C20/25

for cantilever slabs with height offset or wall connection for transmission of moment and shear force, insulation 80 mm

	Egcobox type			MM10-K	MM20	MM25	MM30	MM35	MM45	MM50	MM55	MM60
				-HVS / -WOS								
	length of element [mm]			500	1000	1000	1000	1000	1000	1000	1000	1000
	concrete cover [mm]			M_{Rd} [kNm/element]								
	C30	C35	C50									
height of connection [mm] good bonding conditions		**160**	175	-9,1	-13,6	-18,2	-20,4	-22,7	-25,0	-27,2	-31,8	-34,0
	160	165	**180**	-9,6	-14,4	-19,2	-21,6	-24,0	-26,4	-28,8	-33,6	-36,0
	165	170	185	-10,1	-15,2	-20,3	-22,8	-25,3	-27,9	-30,4	-35,5	-38,0
	170	175	190	-10,7	-16,0	-21,3	-24,0	-26,7	-29,3	-32,0	-37,3	-40,0
	175	**180**	195	-11,2	-16,8	-22,4	-25,2	-28,0	-30,8	-33,6	-39,2	-42,0
	180	185	**200**	-11,7	-17,6	-23,4	-26,4	-29,3	-32,2	-35,1	-41,0	-44,0
	185	190	205	-12,2	-18,4	-24,5	-27,5	-30,6	-33,7	-36,7	-42,9	-46,0
	190	195	210	-12,8	-19,2	-25,5	-28,7	-31,9	-35,1	-38,3	-44,7	-48,0
	195	**200**	215	-13,3	-19,9	-26,6	-29,9	-33,2	-36,6	-39,9	-46,5	-50,0
	200	205	**220**	-13,8	-20,7	-27,7	-31,1	-34,6	-38,0	-41,5	-48,4	-52,0
	205	210	225	-14,4	-21,5	-28,7	-32,3	-35,9	-39,5	-43,1	-50,2	-54,0
	210	215	230	-14,9	-22,3	-29,8	-33,5	-37,2	-40,9	-44,6	-52,1	-56,0
	215	**220**	235	-15,4	-23,1	-30,8	-34,7	-38,5	-42,4	-46,2	-53,9	-58,0
	220	225	**240**	-15,9	-23,9	-31,9	-35,9	-39,8	-43,8	-47,8	-55,8	-60,0
	225	230	245	-16,5	-24,7	-32,9	-37,0	-41,2	-45,3	-49,4	-57,6	-62,0
	230	235	250	-17,0	-25,5	-34,0	-38,2	-42,5	-46,7	-51,0	-59,5	-64,0
	235	**240**	255	-17,5	-26,3	-35,0	-39,4	-43,8	-48,2	-52,6	-61,3	-66,0
	240	245	**260**	-18,0	-27,1	-36,1	-40,6	-45,1	-49,6	-54,1	-63,2	-68,0
	245	250	265	-18,6	-27,9	-37,2	-41,8	-46,4	-51,1	-55,7	-65,0	-70,0
	250	255	270	-19,1	-28,7	-38,2	-43,0	-47,8	-52,5	-57,3	-66,9	-72,0
	255	**260**	275	-19,6	-29,4	-39,3	-44,2	-49,1	-54,0	-58,9	-68,7	-74,0
	260	265	**280**	-20,2	-30,2	-40,3	-45,4	-50,4	-55,4	-60,5	-70,6	-76,0
	265	270	285	-20,7	-31,0	-41,4	-46,5	-51,7	-56,9	-62,1	-72,4	-78,0
	270	275	290	-21,2	-31,8	-42,4	-47,7	-53,0	-58,3	-63,6	-74,3	-80,0
	275	**280**	295	-21,7	-32,6	-43,5	-48,9	-54,4	-59,8	-65,2	-76,1	-82,0
	280	285	**300**	-22,3	-33,4	-44,5	-50,1	-55,7	-61,2	-66,8	-78,0	-84,0
	285	290		-22,8	-34,2	-45,6	-51,3	-57,0	-62,7	-68,4	-79,8	-86,0
	290	295		-23,3	-35,0	-46,7	-52,5	-58,3	-64,1	-70,0	-81,6	-88,0
	295	**300**		-23,9	-35,8	-47,7	-53,7	-59,6	-65,6	-71,6	-83,5	-90,0
	300			-24,4	-36,6	-48,8	-54,9	-61,0	-67,1	-73,1	-85,3	-92,0

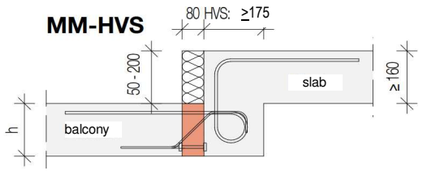

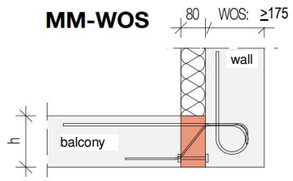

Shear force level		concrete cover [mm]			V_{Rd} [kN/element]									
		C30	C35	C50										
height of connection [mm] good bonding conditions	VS	160-190	160-195	175-210	21,0	41,9	41,9	41,9	41,9	41,9	41,9	41,9	41,9
		195-300	200-300	215-300	21,0	41,9	41,9	41,9	41,9	41,9	41,9	41,9	41,9
	V1	160-190	160-195	175-210	37,3	74,6	74,6	74,6	74,6	74,6	74,6	74,6	74,6
		195-300	200-300	215-300	37,3	74,6	74,6	74,6	74,6	74,6	74,6	74,6	74,6
	V2	160-190	160-195	175-210	55,9	111,9	111,9	111,9	111,9	111,9	111,9	111,9	111,9
		195-300	200-300	215-300	55,9	111,9	111,9	111,9	111,9	111,9	111,9	111,9	111,9
	V3	160-190	160-195	175-210	74,6	149,2	149,2	149,2	149,2	149,2	149,2	149,2	149,2
		195-300	200-300	215-300	74,6	149,2	149,2	149,2	149,2	149,2	149,2	149,2	149,2
	V4	175-190	180-195	195-210	-	221,7	221,7	233,1	233,1	233,1	233,1	233,1	233,1
		195-300	200-300	215-300	-	221,7	221,7	233,1	233,1	233,1	233,1	233,1	233,1
	V6±	160-190	160-195	175-210	+21/ -21	+41,9/ -41,9	+41,9/ -41,9	+41,9/ -41,9	+41,9/ -41,9	+41,9/ -41,9	+41,9/ -41,9	+41,9/ -41,9	+41,9/ -41,9
		195-300	200-300	215-300	+21/ -21	+41,9/ -41,9	+41,9/ -41,9	+41,9/ -41,9	+41,9/ -41,9	+41,9/ -41,9	+41,9/ -41,9	+41,9/ -41,9	+41,9/ -41,9
	V7±	160-190	160-195	175-210	+41,9/ -31,5	+83,9/ -62,9	+83,9/ -62,9	+83,9/ -62,9	+83,9/ -62,9	+83,9/ -62,9	+83,9/ -62,9	+111,9/ -74,6	+111,9/ -74,6
		195-300	200-300	215-300	+41,9/ -31,5	+83,9/ -62,9	+83,9/ -62,9	+83,9/ -62,9	+83,9/ -62,9	+83,9/ -62,9	+83,9/ -62,9	+111,9/ -74,6	+111,9/ -74,6
	V8±	175-190	180-195	195-210	+87,4/ -87,4	+174,8/ -174,8	+174,8/ -174,8	+174,8/ -174,8	+174,8/ -174,8	+174,8/ -174,8	+174,8/ -174,8	+174,8/ -174,8	+174,8/ -174,8
		195-300	200-300	215-300	+87,4/ -87,4	+174,8/ -174,8	+174,8/ -174,8	+174,8/ -174,8	+174,8/ -174,8	+174,8/ -174,8	+174,8/ -174,8	+174,8/ -174,8	+174,8/ -174,8

Shear force level VS to V4 also possible with lifting shear force (-21.0 kN/element depending on height of connection/concrete cover) (designation: VS±, V1±, V2±, V3± or V4±)

Reinforcement Egcobox® type MM-HVS / -WOS

Egcobox type	MM10-K	MM20	MM25	MM30	MM35	MM45	MM50	MM55	MM60
	-HVS / -WOS								
length of element [mm]	**500**	**1000**	**1000**	**1000**	**1000**	**1000**	**1000**	**1000**	**1000**
wall / beam width b_w: -HVS / -WOS [mm]	**≥175**								
tensile bars	4 ø 8	6 ø 8	8 ø 8	9 ø 8	10 ø 8	11 ø 8	12 ø 8	14 ø 8	10 ø 10
length of tensile bars [mm]	depending on bending form								
compression bearings	2 ø 12	4 ø 12	4 ø 12	5 ø 12	7 ø 12	8 ø 12	9 ø 12	12 ø 12	12 ø 12
shear force bars VS	2 ø 6	4 ø 6	4 ø 6	4 ø 6	4 ø 6	4 ø 6	4 ø 6	4 ø 6	4 ø 6
shear force bars V1	2 ø 8	4 ø 8	4 ø 8	4 ø 8	4 ø 8	4 ø 8	4 ø 8	4 ø 8	4 ø 8
shear force bars V2	3 ø 8	6 ø 8	6 ø 8	6 ø 8	6 ø 8	6 ø 8	6 ø 8	6 ø 8	6 ø 8
shear force bars V3	4 ø 8	8 ø 8	8 ø 8	8 ø 8	8 ø 8	8 ø 8	8 ø 8	8 ø 8	8 ø 8
shear force bars V4	-	8 ø 10	8 ø 10	8 ø 10	8 ø 10	8 ø 10	8 ø 10	8 ø 10	8 ø 10
shear force bars VS±	-	4 ø6 / 2 ø6	4 ø6 / 2 ø6	4 ø6 / 2 ø6	4 ø6 / 2 ø6	4 ø6 / 2 ø6	4 ø6 / 2 ø6	4 ø6 / 2 ø6	4 ø6 / 2 ø6
shear force bars V1±	-	4 ø8 / 2 ø6	4 ø8 / 2 ø6	4 ø8 / 2 ø6	4 ø8 / 2 ø6	4 ø8 / 2 ø6	4 ø8 / 2 ø6	4 ø8 / 2 ø6	4 ø8 / 2 ø6
shear force bars V2±	-	6 ø8 / 2 ø6	6 ø8 / 2 ø6	6 ø8 / 2 ø6	6 ø8 / 2 ø6	6 ø8 / 2 ø6	6 ø8 / 2 ø6	6 ø8 / 2 ø6	6 ø8 / 2 ø6
shear force bars V3±	-	8 ø8 / 2 ø6	8 ø8 / 2 ø6	8 ø8 / 2 ø6	8 ø8 / 2 ø6	8 ø8 / 2 ø6	8 ø8 / 2 ø6	8 ø8 / 2 ø6	8 ø8 / 2 ø6
shear force bars V4±	-	8 ø10 / 2 ø6	8 ø10 / 2 ø6	8 ø10 / 2 ø6	8 ø10 / 2 ø6	8 ø10 / 2 ø6	8 ø10 / 2 ø6	8 ø10 / 2 ø6	8 ø10 / 2 ø6
shear force bars V6±	2 ø6 / 2 ø6	4 ø6 / 4 ø6	4 ø6 / 4 ø6	4 ø6 / 4 ø6	4 ø6 / 4 ø6	4 ø6 / 4 ø6	4 ø6 / 4 ø6	4 ø6 / 4 ø6	4 ø6 / 4 ø6
shear force bars V7±	4 ø6 / 3 ø6	8 ø6 / 6 ø6	8 ø6 / 6 ø6	8 ø6 / 6 ø6	8 ø6 / 6 ø6	8 ø6 / 6 ø6	8 ø6 / 6 ø6	6 ø8 / 4 ø8	6 ø8 / 4 ø8
shear force bars V8±	3 ø10 / 3 ø10	6 ø10 / 6 ø10	6 ø10 / 6 ø10	6 ø10 / 6 ø10	6 ø10 / 6 ø10	6 ø10 / 6 ø10	6 ø10 / 6 ø10	6 ø10 / 6 ø10	6 ø10 / 6 ø10
applicable expansion joint distances [m]	**11,7**	**11,7**	**11,7**	**11,7**	**11,7**	**11,7**	**11,7**	**11,7**	**11,7**

Torsion of the slab in the area of the insulation joint - Egcobox® type MM-HVS / -WOS

	Egcobox type			MM10-K	MM20	MM25	MM30	MM35	MM45	MM50	MM55	MM60
				-HVS / -WOS								
	length of element [mm]			**500**	**1000**	**1000**	**1000**	**1000**	**1000**	**1000**	**1000**	**1000**
	concrete cover [mm]			**banking factor k [1/kNm]**								
	C30	**C35**	**C50**									
height of connection [mm] good bonding conditions		**160**	175	1,308	0,822	0,654	0,568	0,489	0,442	0,403	0,338	0,359
	160	165	**180**	1,168	0,734	0,584	0,507	0,437	0,394	0,360	0,302	0,321
	165	170	185	1,049	0,660	0,525	0,456	0,392	0,354	0,323	0,271	0,288
	170	175	190	0,948	0,596	0,474	0,412	0,354	0,320	0,292	0,245	0,260
	175	**180**	195	0,861	0,541	0,430	0,374	0,322	0,291	0,265	0,222	0,236
	180	185	**200**	0,785	0,493	0,392	0,341	0,293	0,265	0,242	0,203	0,215
	185	190	205	0,719	0,452	0,359	0,312	0,269	0,243	0,221	0,186	0,196
	190	195	210	0,661	0,415	0,330	0,287	0,247	0,223	0,203	0,171	0,180
	195	**200**	215	0,609	0,383	0,305	0,265	0,228	0,206	0,188	0,157	0,166
	200	205	**220**	0,564	0,354	0,282	0,245	0,211	0,190	0,174	0,146	0,154
	205	210	225	0,523	0,329	0,261	0,227	0,195	0,177	0,161	0,135	0,142
	210	215	230	0,486	0,306	0,243	0,211	0,182	0,164	0,150	0,126	0,132
	215	**220**	235	0,454	0,285	0,227	0,197	0,170	0,153	0,140	0,117	0,123
	220	225	**240**	0,424	0,267	0,212	0,184	0,159	0,143	0,131	0,110	0,115
	225	230	245	0,397	0,250	0,199	0,173	0,149	0,134	0,122	0,103	0,108
	230	235	250	0,373	0,235	0,187	0,162	0,139	0,126	0,115	0,096	0,101
	235	**240**	255	0,351	0,221	0,175	0,152	0,131	0,119	0,108	0,091	0,095
	240	245	**260**	0,331	0,208	0,165	0,144	0,124	0,112	0,102	0,085	0,090
	245	250	265	0,312	0,196	0,156	0,136	0,117	0,105	0,096	0,081	0,085
	250	255	270	0,295	0,186	0,148	0,128	0,110	0,100	0,091	0,076	0,080
	255	**260**	275	0,280	0,176	0,140	0,121	0,105	0,094	0,086	0,072	0,076
	260	265	**280**	0,265	0,167	0,133	0,115	0,099	0,090	0,082	0,069	0,072
	265	270	285	0,252	0,158	0,126	0,109	0,094	0,085	0,078	0,065	0,068
	270	275	290	0,239	0,150	0,120	0,104	0,089	0,081	0,074	0,062	0,065
	275	**280**	295	0,228	0,143	0,114	0,099	0,085	0,077	0,070	0,059	0,062
	280	285	**300**	0,217	0,137	0,109	0,094	0,081	0,073	0,067	0,056	0,059
	285	290		0,207	0,130	0,104	0,090	0,077	0,070	0,064	0,054	0,056
	290	295		0,198	0,124	0,099	0,086	0,074	0,067	0,061	0,051	0,054
	295	**300**		0,189	0,119	0,095	0,082	0,071	0,064	0,058	0,049	0,051
	300			0,181	0,114	0,091	0,079	0,068	0,061	0,056	0,047	0,049

Rotation spring stiffness Egcobox® type MM-HVS / -WOS

	Egcobox type			MM10-K	MM20	MM25	MM30	MM35	MM45	MM50	MM55	MM60
				-HVS / -WOS								
	length of element [mm]			500	1000	1000	1000	1000	1000	1000	1000	1000
	concrete cover [mm]			Rotation spring stiffness [kNm/rad/Element]								
	C30	C35	C50									
height of connection [mm] good bonding conditions		**160**	175	765	1217	1530	1761	2046	2265	2484	2958	2783
	160	165	**180**	856	1362	1713	1972	2290	2536	2781	3312	3119
	165	170	185	953	1516	1906	2194	2549	2822	3095	3686	3476
	170	175	190	1055	1678	2110	2429	2821	3124	3425	4080	3851
	175	**180**	195	1162	1848	2324	2675	3108	3441	3773	4494	4246
	180	185	**200**	1274	2027	2548	2934	3408	3773	4137	4928	4660
	185	190	205	1391	2214	2783	3204	3722	4121	4518	5382	5093
	190	195	210	1514	2409	3028	3486	4049	4484	4916	5857	5546
	195	**200**	215	1642	2612	3283	3780	4391	4862	5331	6351	6018
	200	205	**220**	1775	2823	3549	4086	4746	5255	5763	6865	6509
	205	210	225	1913	3043	3825	4404	5115	5664	6211	7399	7019
	210	215	230	2056	3271	4112	4734	5498	6088	6676	7953	7548
	215	**220**	235	2204	3507	4408	5075	5895	6528	7158	8527	8097
	220	225	**240**	2358	3751	4715	5429	6306	6982	7656	9121	8665
	225	230	245	2516	4003	5033	5794	6731	7452	8172	9735	9253
	230	235	250	2680	4264	5361	6172	7169	7938	8704	10369	9859
	235	**240**	255	2849	4533	5699	6561	7621	8439	9253	11023	10485
	240	245	**260**	3024	4810	6047	6962	8087	8955	9819	11697	11130
	245	250	265	3203	5096	6406	7375	8567	9486	10402	12391	11794
	250	255	270	3388	5389	6775	7800	9061	10032	11001	13105	12478
	255	**260**	275	3577	5691	7155	8237	9568	10594	11617	13839	13181
	260	265	**280**	3772	6001	7545	8686	10090	11172	12250	14593	13903
	265	270	285	3972	6320	7945	9147	10625	11764	12900	15367	14644
	270	275	290	4178	6646	8355	9619	11174	12372	13566	16161	15405
	275	**280**	295	4388	6981	8776	10104	11737	12995	14250	16975	16185
	280	285	**300**	4604	7324	9207	10600	12313	13634	14950	17809	16984
	285	290		4824	7675	9649	11109	12904	14288	15667	18663	17802
	290	295		5050	8035	10101	11629	13508	14957	16401	19537	18640
	295	**300**		5281	8402	10563	12161	14126	15641	17151	20431	19497
	300			5518	8778	11035	12705	14758	16341	17918	21345	20373

On-site reinforcement Egcobox® type MM-HVS - C20/25

for balconies with offset of height

Egcobox type HVS			MM10-K	MM20	MM25	MM30	MM35	MM45	MM50	MM55	MM60
length of element [mm]			**500**	**1000**	**1000**	**1000**	**1000**	**1000**	**1000**	**1000**	**1000**
reqired minimum width of joist b_w [mm]			175	175	175	175	175	175	175	175	175
Egcobox ø rebar [mm]			ø 8	ø 8	ø 8	ø 8	ø 8	ø 8	ø 8	ø 8	ø 10
Egcobox l_0 rebar [mm]			475	475	475	475	475	475	475	475	612
item ① - lapping reinforcement / element											
≥ as [cm²] B500			2,43	3,64	4,86	5,46	6,07	6,68	7,28	8,50	9,20
suggested on-site reinforcement [mm]			ø 10	ø 10	ø 10	ø 10	ø 10	ø 10	ø 10	ø 10	ø 12
item ② - balcony-side suspension reinforcement shear force / element											
shear force level	VS / VS±	≥ a_s [cm²] B500	-	1,12	1,12	1,12	1,12	1,12	1,12	1,12	1,12
shear force level	V1 / V1±	≥ a_s [cm²] B500	-	1,72	1,72	1,72	1,72	1,72	1,72	1,72	1,72
shear force level	V2 / V2±	≥ a_s [cm²] B500	-	2,57	2,57	2,57	2,57	2,57	2,57	2,57	2,57
shear force level	V3 / V3±	≥ a_s [cm²] B500	-	3,43	3,43	3,43	3,43	3,43	3,43	3,43	3,43
shear force level	V4 / V4±	≥ a_s [cm²] B500	-	5,10	5,10	5,36	5,36	5,36	5,36	5,36	5,36
shear force level	V6±	≥ a_s [cm²] B500	0,56	1,12	1,12	1,12	1,12	1,12	1,12	1,12	1,12
shear force level	V7±	≥ a_s [cm²] B500	0,96	1,93	1,93	1,93	1,93	1,93	1,93	1,93	1,93
shear force level	V8±	≥ a_s [cm²] B500	2,01	4,02	4,02	4,02	4,02	4,02	4,02	4,02	4,02

MM-HVS: minimum width of joist b_w 175 mm (concrete cover 30 mm)

item ⑤ - link reinforcement slabsides / element at <u>direct support</u> (all shear force level - a_s lapping reinforcement)											
offset balcony	**a≤ 90 mm**	≥ a_s [cm²] B500	1,43	2,15	2,87	3,25	3,61	3,97	4,37	5,09	5,52
offset balcony	**a= 150 mm**	≥ a_s [cm²] B500	2,58	3,87	5,17	5,85	6,50	7,15	7,86	9,17	9,93
offset balcony	**a= 260 mm**	≥ a_s [cm²] B500	4,69	7,03	9,37	10,62	11,80	12,98	14,26	16,64	18,02
item ⑥ - link reinforcement / element at <u>indirect support</u> (a_s lapping reinforcement + a_s transverse shear force)											
shear force level VS / VS±	**a≤ 90 mm**	≥ a_s [cm²] B500	1,43+0,48	2,15+0,96	2,87+0,96	3,25+0,96	3,61+0,96	3,97+0,96	4,37+0,96	5,09+0,96	5,52+0,96
	a= 150 mm		2,58+0,48	3,87+0,96	5,17+0,96	5,85+0,96	6,50+0,96	7,15+0,96	7,86+0,96	9,17+0,96	9,93+0,96
	a= 260 mm		4,69+0,48	7,03+0,96	9,37+0,96	10,62+0,96	11,80+0,96	12,98+0,96	14,26+0,96	16,64+0,96	18,02+0,96
shear force level V1 / V1±	**a≤ 90 mm**	≥ a_s [cm²] B500	1,43+0,86	2,15+1,72	2,87+1,72	3,25+1,72	3,61+1,72	3,97+1,72	4,37+1,72	5,09+1,72	5,52+1,72
	a= 150 mm		2,58+0,86	3,87+1,72	5,17+1,72	5,85+1,72	6,50+1,72	7,15+1,72	7,86+1,72	9,17+1,72	9,93+1,72
	a= 260 mm		4,69+0,86	7,03+1,72	9,37+1,72	10,62+1,72	11,80+1,72	12,98+1,72	14,26+1,72	16,64+1,72	18,02+1,72
shear force level V2 / V2±	**a≤ 90 mm**	≥ a_s [cm²] B500	1,43+1,29	2,15+2,57	2,87+2,57	3,25+2,57	3,61+2,57	3,97+2,57	4,37+2,57	5,09+2,57	5,52+2,57
	a= 150 mm		2,58+1,29	3,87+2,57	5,17+2,57	5,85+2,57	6,50+2,57	7,15+2,57	7,86+2,57	9,17+2,57	9,93+2,57
	a= 260 mm		4,69+1,29	7,03+2,57	9,37+2,57	10,62+2,57	11,80+2,57	12,98+2,57	14,26+2,57	16,64+2,57	18,02+2,57
shear force level V3 / V3±	**a≤ 90 mm**	≥ a_s [cm²] B500	1,43+1,72	2,15+3,43	2,87+3,43	3,25+3,43	3,61+3,43	3,97+3,43	4,37+3,43	5,09+3,43	5,52+3,43
	a= 150 mm		2,58+1,72	3,87+3,43	5,17+3,43	5,85+3,43	6,50+3,43	7,15+3,43	7,86+3,43	9,17+3,43	9,93+3,43
	a= 260 mm		4,69+1,72	7,03+3,43	9,37+3,43	10,62+3,43	11,80+3,43	12,98+3,43	14,26+3,43	16,64+3,43	18,02+3,43
shear force level V4 / V4±	**a≤ 90 mm**	≥ a_s [cm²] B500	-	2,15+5,10	2,87+5,10	3,25+5,36	3,61+5,36	3,97+5,36	4,37+5,36	5,09+5,36	5,52+5,36
	a= 150 mm		-	3,87+5,10	5,17+5,10	5,85+5,36	6,50+5,36	7,15+5,36	7,86+5,36	9,17+5,36	9,93+5,36
	a= 260 mm		-	7,03+5,10	9,37+5,10	10,62+5,36	11,80+5,36	12,98+5,36	14,26+5,36	16,64+5,36	18,02+5,36
shear force level V6±	**a≤ 90 mm**	≥ a_s [cm²] B500	1,43+0,48	2,15+0,96	2,87+0,96	3,25+0,96	3,61+0,96	3,97+0,96	4,37+0,96	5,09+0,96	5,52+0,96
	a= 150 mm		2,58+0,48	3,87+0,96	5,17+0,96	5,85+0,96	6,50+0,96	7,15+0,96	7,86+0,96	9,17+0,96	9,93+0,96
	a= 260 mm		4,69+0,48	7,03+0,96	9,37+0,96	10,62+0,96	11,80+0,96	12,98+0,96	14,26+0,96	16,64+0,96	18,02+0,96
shear force level V7±	**a≤ 90 mm**	≥ a_s [cm²] B500	1,43+0,96	2,15+1,93	2,87+1,93	3,25+1,93	3,61+1,93	3,97+1,93	4,37+1,93	5,09+1,93	5,52+1,93
	a= 150 mm		2,58+0,96	3,87+1,93	5,17+1,93	5,85+1,93	6,50+1,93	7,15+1,93	7,86+1,93	9,17+1,93	9,93+1,93
	a= 260 mm		4,69+0,96	7,03+1,93	9,37+1,93	10,62+1,93	11,80+1,93	12,98+1,93	14,26+1,93	16,64+1,93	18,02+1,93
shear force level V8±	**a≤ 90 mm**	≥ a_s [cm²] B500	1,43+2,01	2,15+4,02	2,87+4,02	3,25+4,02	3,61+4,02	3,97+4,02	4,37+4,02	5,09+4,02	5,52+4,02
	a= 150 mm		2,58+2,01	3,87+4,02	5,17+4,02	5,85+4,02	6,50+4,02	7,15+4,02	7,86+4,02	9,17+4,02	9,93+4,02
	a= 260 mm		4,69+2,01	7,03+4,02	9,37+4,02	10,62+4,02	11,80+4,02	12,98+4,02	14,26+4,02	16,64+4,02	18,02+4,02

Egcobox type HVS			MM10-K	MM20	MM25	MM30	MM35	MM45	MM50	MM55	MM60
length of element [mm]			500	1000	1000	1000	1000	1000	1000	1000	1000

MM-HVS: minimum width of joist b_w 200 mm (concrete cover 30 mm)

item ⑤ - link reinforcement slabsides / element at direct support (all shear force level - a_s lapping reinforcement)											
offset balcony	**a≤ 90 mm**	≥ a_s [cm²] B500	1,22	1,83	2,44	2,76	3,07	3,37	3,70	4,32	4,67
offset balcony	**a= 150 mm**	≥ a_s [cm²] B500	2,19	3,29	4,39	4,97	5,52	6,07	6,66	7,77	8,41
offset balcony	**a= 260 mm**	≥ a_s [cm²] B500	3,98	5,97	7,96	9,01	10,01	11,01	12,09	14,10	15,27
item ⑥ - link reinforcement / element at indirect support (a_s lapping reinforcement + a_s transverse shear force)											
shear force level VS / VS±	**a≤ 90 mm**	≥ a_s [cm²] B500	1,22+0,48	1,83+0,96	2,44+0,96	2,76+0,96	3,07+0,96	3,37+0,96	3,70+0,96	4,32+0,96	4,67+0,96
	a= 150 mm		2,19+0,48	3,29+0,96	4,39+0,96	4,97+0,96	5,52+0,96	6,07+0,96	6,66+0,96	7,77+0,96	8,41+0,96
	a= 260 mm		3,98+0,48	5,97+0,96	7,96+0,96	9,01+0,96	10,01+0,96	11,01+0,96	12,09+0,96	14,10+0,96	15,27+0,96
shear force level V1 / V1±	**a≤ 90 mm**	≥ a_s [cm²] B500	1,22+0,86	1,83+1,72	2,44+1,72	2,76+1,72	3,07+1,72	3,37+1,72	3,70+1,72	4,32+1,72	4,67+1,72
	a= 150 mm		2,19+0,86	3,29+1,72	4,39+1,72	4,97+1,72	5,52+1,72	6,07+1,72	6,66+1,72	7,77+1,72	8,41+1,72
	a= 260 mm		3,98+0,86	5,97+1,72	7,96+1,72	9,01+1,72	10,01+1,72	11,01+1,72	12,09+1,72	14,10+1,72	15,27+1,72
shear force level V2 / V2±	**a≤ 90 mm**	≥ a_s [cm²] B500	1,22+1,29	1,83+2,57	2,44+2,57	2,76+2,57	3,07+2,57	3,37+2,57	3,70+2,57	4,32+2,57	4,67+2,57
	a= 150 mm		2,19+1,29	3,29+2,57	4,39+2,57	4,97+2,57	5,52+2,57	6,07+2,57	6,66+2,57	7,77+2,57	8,41+2,57
	a= 260 mm		3,98+1,29	5,97+2,57	7,96+2,57	9,01+2,57	10,01+2,57	11,01+2,57	12,09+2,57	14,10+2,57	15,27+2,57
shear force level V3 / V3±	**a≤ 90 mm**	≥ a_s [cm²] B500	1,22+1,72	1,83+3,43	2,44+3,43	2,76+3,43	3,07+3,43	3,37+3,43	3,70+3,43	4,32+3,43	4,67+3,43
	a= 150 mm		2,19+1,72	3,29+3,43	4,39+3,43	4,97+3,43	5,52+3,43	6,07+3,43	6,66+3,43	7,77+3,43	8,41+3,43
	a= 260 mm		3,98+1,72	5,97+3,43	7,96+3,43	9,01+3,43	10,01+3,43	11,01+3,43	12,09+3,43	14,10+3,43	15,27+3,43
shear force level V4 / V4±	**a≤ 90 mm**	≥ a_s [cm²] B500	-	1,83+5,10	2,44+5,10	2,76+5,36	3,07+5,36	3,37+5,36	3,70+5,36	4,32+5,36	4,67+5,36
	a= 150 mm		-	3,29+5,10	4,39+5,10	4,97+5,36	5,52+5,36	6,07+5,36	6,66+5,36	7,77+5,36	8,41+5,36
	a= 260 mm		-	5,97+5,10	7,96+5,10	9,01+5,36	10,01+5,36	11,01+5,36	12,09+5,36	14,10+5,36	15,27+5,36
shear force level V6±	**a≤ 90 mm**	≥ a_s [cm²] B500	1,22+0,48	1,83+0,96	2,44+0,96	2,76+0,96	3,07+0,96	3,37+0,96	3,70+0,96	4,32+0,96	4,67+0,96
	a= 150 mm		2,19+0,48	3,29+0,96	4,39+0,96	4,97+0,96	5,52+0,96	6,07+0,96	6,66+0,96	7,77+0,96	8,41+0,96
	a= 260 mm		3,98+0,48	5,97+0,96	7,96+0,96	9,01+0,96	10,01+0,96	11,01+0,96	12,09+0,96	14,10+0,96	15,27+0,96
shear force level V7±	**a≤ 90 mm**	≥ a_s [cm²] B500	1,22+0,96	1,83+1,93	2,44+1,93	2,76+1,93	3,07+1,93	3,37+1,93	3,70+1,93	4,32+1,93	4,67+1,93
	a= 150 mm		2,19+0,96	3,29+1,93	4,39+1,93	4,97+1,93	5,52+1,93	6,07+1,93	6,66+1,93	7,77+1,93	8,41+1,93
	a= 260 mm		3,98+0,96	5,97+1,93	7,96+1,93	9,01+1,93	10,01+1,93	11,01+1,93	12,09+1,93	14,10+1,93	15,27+1,93
shear force level V8±	**a≤ 90 mm**	≥ a_s [cm²] B500	1,22+2,01	1,83+4,02	2,44+4,02	2,76+4,02	3,07+4,02	3,37+4,02	3,70+4,02	4,32+4,02	4,67+4,02
	a= 150 mm		2,19+2,01	3,29+4,02	4,39+4,02	4,97+4,02	5,52+4,02	6,07+4,02	6,66+4,02	7,77+4,02	8,41+4,02
	a= 260 mm		3,98+2,01	5,97+4,02	7,96+4,02	9,01+4,02	10,01+4,02	11,01+4,02	12,09+4,02	14,10+4,02	15,27+4,02

MM-HVS: minimum width of joist b_w 220 mm (concrete cover 30 mm)

item ⑤ - link reinforcement slabsides / element at direct support (all shear force level - a_s lapping reinforcement)											
offset balcony	**a≤ 90 mm**	≥ a_s [cm²] B500	1,09	1,63	2,18	2,46	2,73	3,01	3,30	3,85	4,17
offset balcony	**a= 150 mm**	≥ a_s [cm²] B500	1,96	2,94	3,92	4,43	4,92	5,41	5,94	6,93	7,50
offset balcony	**a= 260 mm**	≥ a_s [cm²] B500	3,55	5,33	7,11	8,04	8,93	9,82	10,78	12,57	13,61
item ⑥ - link reinforcement / element at indirect support (a_s lapping reinforcement + a_s transverse shear force)											
shear force level VS / VS±	**a≤ 90 mm**	≥ a_s [cm²] B500	1,12+0,48	1,63+0,96	2,18+0,96	2,46+0,96	2,73+0,96	3,01+0,96	3,30+0,96	3,85+0,96	4,17+0,96
	a= 150 mm		1,96+0,48	2,94+0,96	3,92+0,96	4,43+0,96	4,92+0,96	5,41+0,96	5,94+0,96	6,93+0,96	7,50+0,96
	a= 260 mm		3,55+0,48	5,33+0,96	7,11+0,96	8,04+0,96	8,93+0,96	9,82+0,96	10,78+0,96	12,57+0,96	13,61+0,96
shear force level V1 / V1±	**a≤ 90 mm**	≥ a_s [cm²] B500	1,12+0,86	1,63+1,72	2,18+1,72	2,46+1,72	2,73+1,72	3,01+1,72	3,30+1,72	3,85+1,72	4,17+1,72
	a= 150 mm		1,96+0,86	2,94+1,72	3,92+1,72	4,43+1,72	4,92+1,72	5,41+1,72	5,94+1,72	6,93+1,72	7,50+1,72
	a= 260 mm		3,55+0,86	5,33+1,72	7,11+1,72	8,04+1,72	8,93+1,72	9,82+1,72	10,78+1,72	12,57+1,72	13,61+1,72
shear force level V2 / V2±	**a≤ 90 mm**	≥ a_s [cm²] B500	1,12+1,29	1,63+2,57	2,18+2,57	2,46+2,57	2,73+2,57	3,01+2,57	3,30+2,57	3,85+2,57	4,17+2,57
	a= 150 mm		1,96+1,29	2,94+2,57	3,92+2,57	4,43+2,57	4,92+2,57	5,41+2,57	5,94+2,57	6,93+2,57	7,50+2,57
	a= 260 mm		3,55+1,29	5,33+2,57	7,11+2,57	8,04+2,57	8,93+2,57	9,82+2,57	10,78+2,57	12,57+2,57	13,61+2,57
shear force level V3 / V3±	**a≤ 90 mm**	≥ a_s [cm²] B500	1,12+1,72	1,63+3,43	2,18+3,43	2,46+3,43	2,73+3,43	3,01+3,43	3,30+3,43	3,85+3,43	4,17+3,43
	a= 150 mm		1,96+1,72	2,94+3,43	3,92+3,43	4,43+3,43	4,92+3,43	5,41+3,43	5,94+3,43	6,93+3,43	7,50+3,43
	a= 260 mm		3,55+1,72	5,33+3,43	7,11+3,43	8,04+3,43	8,93+3,43	9,82+3,43	10,78+3,43	12,57+3,43	13,61+3,43
shear force level V4 / V4±	**a≤ 90 mm**	≥ a_s [cm²] B500	-	1,63+5,10	2,18+5,10	2,46+5,36	2,73+5,36	3,01+5,36	3,30+5,36	3,85+5,36	4,17+5,36
	a= 150 mm		-	2,94+5,10	3,92+5,10	4,43+5,36	4,92+5,36	5,41+5,36	5,94+5,36	6,93+5,36	7,50+5,36
	a= 260 mm		-	5,33+5,10	7,11+5,10	8,04+5,36	8,93+5,36	9,82+5,36	10,78+5,36	12,57+5,36	13,61+5,36
shear force level V6±	**a≤ 90 mm**	≥ a_s [cm²] B500	1,12+0,48	1,63+0,96	2,18+0,96	2,46+0,96	2,73+0,96	3,01+0,96	3,30+0,96	3,85+0,96	4,17+0,96
	a= 150 mm		1,96+0,48	2,94+0,96	3,92+0,96	4,43+0,96	4,92+0,96	5,41+0,96	5,94+0,96	6,93+0,96	7,50+0,96
	a= 260 mm		3,55+0,48	5,33+0,96	7,11+0,96	8,04+0,96	8,93+0,96	9,82+0,96	10,78+0,96	12,57+0,96	13,61+0,96
shear force level V7±	**a≤ 90 mm**	≥ a_s [cm²] B500	1,12+0,96	1,63+1,93	2,18+1,93	2,46+1,93	2,73+1,93	3,01+1,93	3,30+1,93	3,85+1,93	4,17+1,93
	a= 150 mm		1,96+0,96	2,94+1,93	3,92+1,93	4,43+1,93	4,92+1,93	5,41+1,93	5,94+1,93	6,93+1,93	7,50+1,93
	a= 260 mm		3,55+0,96	5,33+1,93	7,11+1,93	8,04+1,93	8,93+1,93	9,82+1,93	10,78+1,93	12,57+1,93	13,61+1,93
shear force level V8±	**a≤ 90 mm**	≥ a_s [cm²] B500	1,12+2,01	1,63+4,02	2,18+4,02	2,46+4,02	2,73+4,02	3,01+4,02	3,30+4,02	3,85+4,02	4,17+4,02
	a= 150 mm		1,96+2,01	2,94+4,02	3,92+4,02	4,43+4,02	4,92+4,02	5,41+4,02	5,94+4,02	6,93+4,02	7,50+4,02
	a= 260 mm		3,55+2,01	5,33+4,02	7,11+4,02	8,04+4,02	8,93+4,02	9,82+4,02	10,78+4,02	12,57+4,02	13,61+4,02

Egcobox type HVS	MM10-K	MM20	MM25	MM30	MM35	MM45	MM50	MM55	MM60
length of element [mm]	500	1000	1000	1000	1000	1000	1000	1000	1000

MM-HVS: minimum width of joist b_w 250 mm (concrete cover 30 mm)

item ⑤ - link reinforcement slabsides / element at direct support (all shear force level - a_s lapping reinforcement)											
offset balcony	**a≤ 90 mm**	≥ a_s [cm²] B500	0,94	1,40	1,87	2,12	2,35	2,59	2,84	3,31	3,58
offset balcony	**a= 150 mm**	≥ a_s [cm²] B500	1,69	2,53	3,37	3,81	4,23	4,66	5,10	5,96	6,45
offset balcony	**a= 260 mm**	≥ a_s [cm²] B500	3,06	4,59	6,12	6,92	7,68	8,45	9,26	10,81	11,70
item ⑥ - link reinforcement / element at indirect support (a_s lapping reinforcement + a_s transverse shear force)											
shear force level VS / VS±	**a≤ 90 mm**	≥ a_s [cm²] B500	1,12+0,48	1,40+0,96	1,87+0,96	2,12+0,96	2,35+0,96	2,59+0,96	2,84+0,96	3,31+0,96	3,58+0,96
	a= 150 mm		1,69+0,48	2,53+0,96	3,37+0,96	3,81+0,96	4,23+0,96	4,66+0,96	5,10+0,96	5,96+0,96	6,45+0,96
	a= 260 mm		3,06+0,48	4,59+0,96	6,12+0,96	6,92+0,96	7,68+0,96	8,45+0,96	9,26+0,96	10,81+0,96	11,70+0,96
shear force level V1 / V1±	**a≤ 90 mm**	≥ a_s [cm²] B500	1,12+0,86	1,40+1,72	1,87+1,72	2,12+1,72	2,35+1,72	2,59+1,72	2,84+1,72	3,31+1,72	3,58+1,72
	a= 150 mm		1,69+0,86	2,53+1,72	3,37+1,72	3,81+1,72	4,23+1,72	4,66+1,72	5,10+1,72	5,96+1,72	6,45+1,72
	a= 260 mm		3,06+0,86	4,59+1,72	6,12+1,72	6,92+1,72	7,68+1,72	8,45+1,72	9,26+1,72	10,81+1,72	11,70+1,72
shear force level V2 / V2±	**a≤ 90 mm**	≥ a_s [cm²] B500	1,12+1,29	1,40+2,57	1,87+2,57	2,12+2,57	2,35+2,57	2,59+2,57	2,84+2,57	3,31+2,57	3,58+2,57
	a= 150 mm		1,69+1,29	2,53+2,57	3,37+2,57	3,81+2,57	4,23+2,57	4,66+2,57	5,10+2,57	5,96+2,57	6,45+2,57
	a= 260 mm		3,06+1,29	4,59+2,57	6,12+2,57	6,92+2,57	7,68+2,57	8,45+2,57	9,26+2,57	10,81+2,57	11,70+2,57
shear force level V3 / V3±	**a≤ 90 mm**	≥ a_s [cm²] B500	1,12+1,72	1,40+3,43	1,87+3,43	2,12+3,43	2,35+3,43	2,59+3,43	2,84+3,43	3,31+3,43	3,58+3,43
	a= 150 mm		1,69+1,72	2,53+3,43	3,37+3,43	3,81+3,43	4,23+3,43	4,66+3,43	5,10+3,43	5,96+3,43	6,45+3,43
	a= 260 mm		3,06+1,72	4,59+3,43	6,12+3,43	6,92+3,43	7,68+3,43	8,45+3,43	9,26+3,43	10,81+3,43	11,70+3,43
shear force level V4 / V4±	**a≤ 90 mm**	≥ a_s [cm²] B500	-	1,40+5,10	1,87+5,10	2,12+5,36	2,35+5,36	2,59+5,36	2,84+5,36	3,31+5,36	3,58+5,36
	a= 150 mm		-	2,53+5,10	3,37+5,10	3,81+5,36	4,23+5,36	4,66+5,36	5,10+5,36	5,96+5,36	6,45+5,36
	a= 260 mm		-	4,59+5,10	6,12+5,10	6,92+5,36	7,68+5,36	8,45+5,36	9,26+5,36	10,81+5,36	11,70+5,36
shear force level V6±	**a≤ 90 mm**	≥ a_s [cm²] B500	1,12+0,48	1,40+0,96	1,87+0,96	2,12+0,96	2,35+0,96	2,59+0,96	2,84+0,96	3,31+0,96	3,58+0,96
	a= 150 mm		1,69+0,48	2,53+0,96	3,37+0,96	3,81+0,96	4,23+0,96	4,66+0,96	5,10+0,96	5,96+0,96	6,45+0,96
	a= 260 mm		3,06+0,48	4,59+0,96	6,12+0,96	6,92+0,96	7,68+0,96	8,45+0,96	9,26+0,96	10,81+0,96	11,70+0,96
shear force level V7±	**a≤ 90 mm**	≥ a_s [cm²] B500	1,12+0,96	1,40+1,93	1,87+1,93	2,12+1,93	2,35+1,93	2,59+1,93	2,84+1,93	3,31+1,93	3,58+1,93
	a= 150 mm		1,69+0,96	2,53+1,93	3,37+1,93	3,81+1,93	4,23+1,93	4,66+1,93	5,10+1,93	5,96+1,93	6,45+1,93
	a= 260 mm		3,06+0,96	4,59+1,93	6,12+1,93	6,92+1,93	7,68+1,93	8,45+1,93	9,26+1,93	10,81+1,93	11,70+1,93
shear force level V8±	**a≤ 90 mm**	≥ a_s [cm²] B500	1,12+2,01	1,40+4,02	1,87+4,02	2,12+4,02	2,35+4,02	2,59+4,02	2,84+4,02	3,31+4,02	3,58+4,02
	a= 150 mm		1,69+2,01	2,53+4,02	3,37+4,02	3,81+4,02	4,23+4,02	4,66+4,02	5,10+4,02	5,96+4,02	6,45+4,02
	a= 260 mm		3,06+2,01	4,59+4,02	6,12+4,02	6,92+4,02	7,68+4,02	8,45+4,02	9,26+4,02	10,81+4,02	11,70+4,02

item ③+④ - structural reinforcement
In the slab edge of the u-bar reinforcement is respectively to arrange ≥ ø8 (item ③).
On the balcony side, it is recommended to design the edge reinforcement for the shear force V_{Ed} / f_{yd} ≥ ø6/250 mm according to EN 1992 (item ④ - vs. item ②).

The dimension of the balcony offset HV [mm] must be specified in the element name, e.g. MM20-HVS120-C35-h200.

The suggested lapping reinforcement (α_6=1,5) is selected (item ①) to transfer 100% of the M_{Rd} of the Egcobox℠ (height Egcobox℠ = height floor). An other reinforcement selection is possible.
In case of an other reinforcement selection shall be approved the lapping reinforcement in accordance with EN 1992. The reinforcement cross section or the lapping length can be derated in reference of utilization proportional M_{Ed} / M_{Rd}. The lapping reinforcement must be approved by the structural engineer.

The proposed steel cross-section a_s (item ②) covers the maximum design transverse force V_{Rd} of the Egcobox℠. In case of smaller actions, the edge reinforcement may be determined with V_{Ed} / f_{yd} ≥ ø6/250 mm.

Item ⑤ or item ⑥ applies to the specified required minimum widths of the joist (b_w) and the height of the offset (a= 50 mm; a=100 mm; a= 200 mm). For larger joist widths, a reduction of the required reinforcement is possible.
In between, interpolation is possible; recommended minimum reinforcement ø6/250 mm.
When selecting the reinforcement, the reinforcement rules and the lap lengths must be taken into account. Ø6/250 mm is recommended as the minimum reinforcement.
For low offset heights ≤90 mm (connection height Egcobox from 160 mm) to 230 mm (connection height 300 mm), the use of Egcobox® standard elements without height offset is recommended as an alternative.

Item ⑧ must be verified and planned by the structural engineer (corresponds to item ① for slab thickness = balcony slab thickness;
for slab thickness ≠ balcony slab thickness, an allowance is required or reduction is possible). The load transmission into the slab must be verified by the structural engineer.

The specifications apply to good bonding conditions.

The specified connection reinforcement is required exclusively for the static transfer of the cutting forces from the cantilever slab connection.
The statically required beam-reinforcement is not taken into account and shown. This must be additionally dimensioned by the structural engineer.
The specified connection reinforcement is only a suggestion. The structural engineer in charge must check the feasibility of the design.
The distribution of the Egcobox® reinforcement and the required minimum beam widths must be observed.
In the case of alternating shear forces, the embedment length of the shear force bar must be taken into account when selecting the beam width.

design proposal
direct support

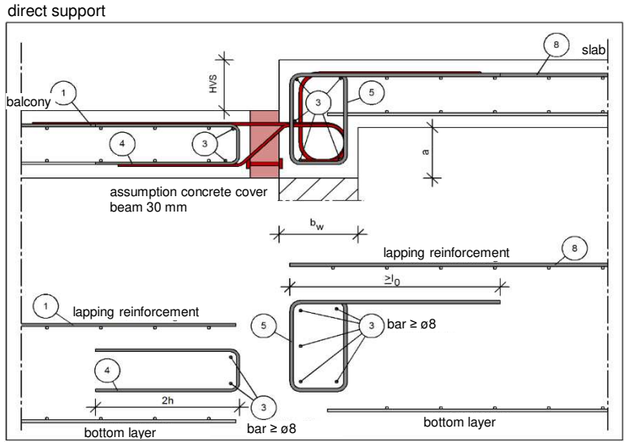

indirect support

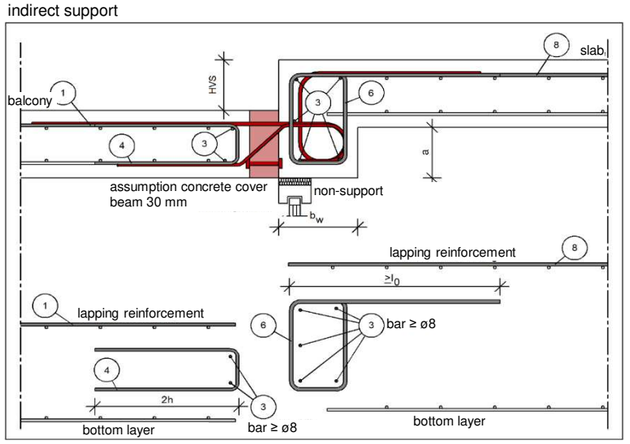

On-site reinforcement Egcobox® type MM-WOS - C20/25

for balconies with overlap in wall upwards

Egcobox type WOS			MM10-K	MM20	MM25	MM30	MM35	MM45	MM50	MM55	MM60
length of element [mm]			**500**	**1000**	**1000**	**1000**	**1000**	**1000**	**1000**	**1000**	**1000**
reqired minimum width of joist b_w [mm]			175	175	175	175	175	175	175	175	175
Egcobox ø rebar [mm]			ø 8	ø 8	ø 8	ø 8	ø 8	ø 8	ø 8	ø 8	ø 10
Egcobox l_0 rebar [mm]			475	475	475	475	475	475	475	475	612
item ① - lapping reinforcement / element											
≥ as [cm²] B500			2,43	3,64	4,86	5,46	6,07	6,68	7,28	8,50	9,20
suggested on-site reinforcement [mm]			ø 10	ø 10	ø 10	ø 10	ø 10	ø 10	ø 10	ø 10	ø 12
item ② - balcony-side suspension reinforcement shear force / element											
shear force level	VS / VS±	≥ a_s [cm²] B500	-	1,12	1,12	1,12	1,12	1,12	1,12	1,12	1,12
shear force level	V1 / V1±	≥ a_s [cm²] B500	-	1,72	1,72	1,72	1,72	1,72	1,72	1,72	1,72
shear force level	V2 / V2±	≥ a_s [cm²] B500	-	2,57	2,57	2,57	2,57	2,57	2,57	2,57	2,57
shear force level	V3 / V3±	≥ a_s [cm²] B500	-	3,43	3,43	3,43	3,43	3,43	3,43	3,43	3,43
shear force level	V4 / V4±	≥ a_s [cm²] B500	-	5,10	5,10	5,36	5,36	5,36	5,36	5,36	5,36
shear force level	V6±	≥ a_s [cm²] B500	0,56	1,12	1,12	1,12	1,12	1,12	1,12	1,12	1,12
shear force level	V7±	≥ a_s [cm²] B500	0,96	1,93	1,93	1,93	1,93	1,93	1,93	1,93	1,93
shear force level	V8±	≥ a_s [cm²] B500	2,01	4,02	4,02	4,02	4,02	4,02	4,02	4,02	4,02

MM-WOS: minimum width of joist b_w 175 mm (concrete cover 30 mm)

item ⑤ - link reinforcement in wall / element at <u>direct support</u> (all shear force level - a_s lapping reinforcement)											
connection	**h= 160 mm**	≥ a_s [cm²] B500	1,72	2,58	3,44	3,90	4,34	4,77	5,24	6,11	6,62
height	**h= 250 mm**	≥ a_s [cm²] B500	3,44	5,17	6,89	7,80	8,67	9,54	10,48	12,23	13,24
item ⑥ - link reinforcement / element at <u>indirect support</u> (a_s lapping reinforcement + a_s transverse shear force)											
shear force level VS	**h= 160 mm**	≥ a_s [cm²] B500	1,72+0,48	2,58+0,96	3,44+0,96	3,90+0,96	4,34+0,96	4,77+0,96	5,24+0,96	6,11+0,96	6,62+0,96
/ VS±	**h= 250 mm**		3,44+0,48	5,17+0,96	6,89+0,96	7,80+0,96	8,67+0,96	9,54+0,96	10,48+0,96	12,23+0,96	13,24+0,96
shear force level V1	**h= 160 mm**	≥ a_s [cm²] B500	1,72+0,86	2,58+1,72	3,44+1,72	3,90+1,72	4,34+1,72	4,77+1,72	5,24+1,72	6,11+1,72	6,62+1,72
/ V1±	**h= 250 mm**		3,44+0,86	5,17+1,72	6,89+1,72	7,80+1,72	8,67+1,72	9,54+1,72	10,48+1,72	12,23+1,72	13,24+1,72
shear force level V2	**h= 160 mm**	≥ a_s [cm²] B500	1,72+1,29	2,58+2,57	3,44+2,57	3,90+2,57	4,34+2,57	4,77+2,57	5,24+2,57	6,11+2,57	6,62+2,57
/ V2±	**h= 250 mm**		3,44+1,29	5,17+2,57	6,89+2,57	7,80+2,57	8,67+2,57	9,54+2,57	10,48+2,57	12,23+2,57	13,24+2,57
shear force level V3	**h= 160 mm**	≥ a_s [cm²] B500	1,72+1,72	2,58+3,43	3,44+3,43	3,90+3,43	4,34+3,43	4,77+3,43	5,24+3,43	6,11+3,43	6,62+3,43
/ V3±	**h= 250 mm**		3,44+1,72	5,17+3,43	6,89+3,43	7,80+3,43	8,67+3,43	9,54+3,43	10,48+3,43	12,23+3,43	13,24+3,43
shear force level V4	**h= 160 mm**	≥ a_s [cm²] B500	-	2,58+5,10	3,44+5,10	3,90+5,36	4,34+5,36	4,77+5,36	5,24+5,36	6,11+5,36	6,62+5,36
/ V4±	**h= 250 mm**		-	5,17+5,10	6,89+5,10	7,80+5,36	8,67+5,36	9,54+5,36	10,48+5,36	12,23+5,36	13,24+5,36
shear force level	**h= 160 mm**	≥ a_s [cm²] B500	1,72+0,48	2,58+0,96	3,44+0,96	3,90+0,96	4,34+0,96	4,77+0,96	5,24+0,96	6,11+0,96	6,62+0,96
V6±	**h= 250 mm**		3,44+0,48	5,17+0,96	6,89+0,96	7,80+0,96	8,67+0,96	9,54+0,96	10,48+0,96	12,23+0,96	13,24+0,96
shear force level	**h= 160 mm**	≥ a_s [cm²] B500	1,72+0,96	2,58+1,93	3,44+1,93	3,90+1,93	4,34+1,93	4,77+1,93	5,24+1,93	6,11+1,93	6,62+1,93
V7±	**h= 250 mm**		3,44+0,96	5,17+1,93	6,89+1,93	7,80+1,93	8,67+1,93	9,54+1,93	10,48+1,93	12,23+1,93	13,24+1,93
shear force level	**h= 160 mm**	≥ a_s [cm²] B500	1,72+2,01	2,58+4,02	3,44+4,02	3,90+4,02	4,34+4,02	4,77+4,02	5,24+4,02	6,11+4,02	6,62+4,02
V8±	**h= 250 mm**		3,44+2,01	5,17+4,02	6,89+4,02	7,80+4,02	8,67+4,02	9,54+4,02	10,48+4,02	12,23+4,02	13,24+4,02

MM-WOS: minimum width of joist b_w 200 mm (concrete cover 30 mm)

item ⑤ - link reinforcement in wall / element at <u>direct support</u> (all shear force level - a_s lapping reinforcement)											
connection	**h= 160 mm**	≥ a_s [cm²] B500	1,46	2,19	2,92	3,31	3,68	4,05	4,44	5,18	5,61
height	**h= 250 mm**	≥ a_s [cm²] B500	2,92	4,39	5,85	6,62	7,36	8,09	8,88	10,36	11,22
item ⑥ - link reinforcement / element at <u>indirect support</u> (a_s lapping reinforcement + a_s transverse shear force)											
shear force level VS	**h= 160 mm**	≥ a_s [cm²] B500	1,46+0,48	2,19+0,96	2,92+0,96	3,31+0,96	3,68+0,96	4,05+0,96	4,44+0,96	5,18+0,96	5,61+0,96
/ VS±	**h= 250 mm**		2,92+0,48	4,39+0,96	5,85+0,96	6,62+0,96	7,36+0,96	8,09+0,96	8,88+0,96	10,36+0,96	11,22+0,96
shear force level V1	**h= 160 mm**	≥ a_s [cm²] B500	1,46+0,86	2,19+1,72	2,92+1,72	3,31+1,72	3,68+1,72	4,05+1,72	4,44+1,72	5,18+1,72	5,61+1,72
/ V1±	**h= 250 mm**		2,92+0,86	4,39+1,72	5,85+1,72	6,62+1,72	7,36+1,72	8,09+1,72	8,88+1,72	10,36+1,72	11,22+1,72
shear force level V2	**h= 160 mm**	≥ a_s [cm²] B500	1,46+1,29	2,19+2,57	2,92+2,57	3,31+2,57	3,68+2,57	4,05+2,57	4,44+2,57	5,18+2,57	5,61+2,57
/ V2±	**h= 250 mm**		2,92+1,29	4,39+2,57	5,85+2,57	6,62+2,57	7,36+2,57	8,09+2,57	8,88+2,57	10,36+2,57	11,22+2,57
shear force level V3	**h= 160 mm**	≥ a_s [cm²] B500	1,46+1,72	2,19+3,43	2,92+3,43	3,31+3,43	3,68+3,43	4,05+3,43	4,44+3,43	5,18+3,43	5,61+3,43
/ V3±	**h= 250 mm**		2,92+1,72	4,39+3,43	5,85+3,43	6,62+3,43	7,36+3,43	8,09+3,43	8,88+3,43	10,36+3,43	11,22+3,43
shear force level V4	**h= 160 mm**	≥ a_s [cm²] B500	-	2,19+5,10	2,92+5,10	3,31+5,36	3,68+5,36	4,05+5,36	4,44+5,36	5,18+5,36	5,61+5,36
/ V4±	**h= 250 mm**		-	4,39+5,10	5,85+5,10	6,62+5,36	7,36+5,36	8,09+5,36	8,88+5,36	10,36+5,36	11,22+5,36
shear force level	**h= 160 mm**	≥ a_s [cm²] B500	1,46+0,48	2,19+0,96	2,92+0,96	3,31+0,96	3,68+0,96	4,05+0,96	4,44+0,96	5,18+0,96	5,61+0,96
V6±	**h= 250 mm**		2,92+0,48	4,39+0,96	5,85+0,96	6,62+0,96	7,36+0,96	8,09+0,96	8,88+0,96	10,36+0,96	11,22+0,96
shear force level	**h= 160 mm**	≥ a_s [cm²] B500	1,46+0,96	2,19+1,93	2,92+1,93	3,31+1,93	3,68+1,93	4,05+1,93	4,44+1,93	5,18+1,93	5,61+1,93
V7±	**h= 250 mm**		2,92+0,96	4,39+1,93	5,85+1,93	6,62+1,93	7,36+1,93	8,09+1,93	8,88+1,93	10,36+1,93	11,22+1,93
shear force level	**h= 160 mm**	≥ a_s [cm²] B500	1,46+2,01	2,19+4,02	2,92+4,02	3,31+4,02	3,68+4,02	4,05+4,02	4,44+4,02	5,18+4,02	5,61+4,02
V8±	**h= 250 mm**		2,92+2,01	4,39+4,02	5,85+4,02	6,62+4,02	7,36+4,02	8,09+4,02	8,88+4,02	10,36+4,02	11,22+4,02

Egcobox Typ WOS	MM10-K	MM20	MM25	MM30	MM35	MM45	MM50	MM55	MM60
Elementlänge l [mm]	500	1000	1000	1000	1000	1000	1000	1000	1000

MM-WOS: minimum width of joist b_w 220 mm (concrete cover 30 mm)

item ⑤ - link reinforcement in wall / element at direct support (all shear force level - a_s lapping reinforcement)											
connection	**h= 160 mm**	≥ a_s [cm²] B500	1,31	1,96	2,61	2,95	3,28	3,61	3,96	4,62	5,00
height	**h= 250 mm**	≥ a_s [cm²] B500	2,61	3,92	5,22	5,91	6,56	7,22	7,92	9,24	10,00
item ⑥ - link reinforcement / element at indirect support (a_s lapping reinforcement + a_s transverse shear force)											
shear force level VS	**h= 160 mm**	≥ a_s [cm²] B500	1,31+0,48	1,96+0,96	2,61+0,96	2,95+0,96	3,28+0,96	3,61+0,96	3,96+0,96	4,62+0,96	5,00+0,96
/ VS±	**h= 250 mm**		2,61+0,48	3,92+0,96	5,22+0,96	5,91+0,96	6,56+0,96	7,22+0,96	7,92+0,96	9,24+0,96	10,00+0,96
shear force level V1	**h= 160 mm**	≥ a_s [cm²] B500	1,31+0,86	1,96+1,72	2,61+1,72	2,95+1,72	3,28+1,72	3,61+1,72	3,96+1,72	4,62+1,72	5,00+1,72
/ V1±	**h= 250 mm**		2,61+0,86	3,92+1,72	5,22+1,72	5,91+1,72	6,56+1,72	7,22+1,72	7,92+1,72	9,24+1,72	10,00+1,72
shear force level V2	**h= 160 mm**	≥ a_s [cm²] B500	1,31+1,29	1,96+2,57	2,61+2,57	2,95+2,57	3,28+2,57	3,61+2,57	3,96+2,57	4,62+2,57	5,00+2,57
/ V2±	**h= 250 mm**		2,61+1,29	3,92+2,57	5,22+2,57	5,91+2,57	6,56+2,57	7,22+2,57	7,92+2,57	9,24+2,57	10,00+2,57
shear force level V3	**h= 160 mm**	≥ a_s [cm²] B500	1,31+1,72	1,96+3,43	2,61+3,43	2,95+3,43	3,28+3,43	3,61+3,43	3,96+3,43	4,62+3,43	5,00+3,43
/ V3±	**h= 250 mm**		2,61+1,72	3,92+3,43	5,22+3,43	5,91+3,43	6,56+3,43	7,22+3,43	7,92+3,43	9,24+3,43	10,00+3,43
shear force level V4	**h= 160 mm**	≥ a_s [cm²] B500	-	1,96+5,10	2,61+5,10	2,95+5,36	3,28+5,36	3,61+5,36	3,96+5,36	4,62+5,36	5,00+5,36
/ V4±	**h= 250 mm**		-	3,92+5,10	5,22+5,10	5,91+5,36	6,56+5,36	7,22+5,36	7,92+5,36	9,24+5,36	10,00+5,36
shear force level	**h= 160 mm**	≥ a_s [cm²] B500	1,31+0,48	1,96+0,96	2,61+0,96	2,95+0,96	3,28+0,96	3,61+0,96	3,96+0,96	4,62+0,96	5,00+0,96
V6±	**h= 250 mm**		2,61+0,48	3,92+0,96	5,22+0,96	5,91+0,96	6,56+0,96	7,22+0,96	7,92+0,96	9,24+0,96	10,00+0,96
shear force level	**h= 160 mm**	≥ a_s [cm²] B500	1,31+0,96	1,96+1,93	2,61+1,93	2,95+1,93	3,28+1,93	3,61+1,93	3,96+1,93	4,62+1,93	5,00+1,93
V7±	**h= 250 mm**		2,61+0,96	3,92+1,93	5,22+1,93	5,91+1,93	6,56+1,93	7,22+1,93	7,92+1,93	9,24+1,93	10,00+1,93
shear force level	**h= 160 mm**	≥ a_s [cm²] B500	1,31+2,01	1,96+4,02	2,61+4,02	2,95+4,02	3,28+4,02	3,61+4,02	3,96+4,02	4,62+4,02	5,00+4,02
V8±	**h= 250 mm**		2,61+2,01	3,92+4,02	5,22+4,02	5,91+4,02	6,56+4,02	7,22+4,02	7,92+4,02	9,24+4,02	10,00+4,02

MM-WOS: minimum width of joist b_w 250 mm (concrete cover 30 mm)

item ⑤ - link reinforcement in wall / element at direct support (all shear force level - a_s lapping reinforcement)											
connection	**h= 160 mm**	≥ a_s [cm²] B500	1,12	1,69	2,25	2,54	2,82	3,11	3,40	3,97	4,30
height	**h= 250 mm**	≥ a_s [cm²] B500	2,25	3,37	4,50	5,08	5,65	6,21	6,81	7,94	8,60
item ⑥ - link reinforcement / element at indirect support (a_s lapping reinforcement + a_s transverse shear force)											
shear force level VS	**h= 160 mm**	≥ a_s [cm²] B500	1,12+0,48	1,69+0,96	2,25+0,96	2,54+0,96	2,82+0,96	3,11+0,96	3,40+0,96	3,97+0,96	4,30+0,96
/ VS±	**h= 250 mm**		2,25+0,48	3,37+0,96	4,50+0,96	5,08+0,96	5,65+0,96	6,21+0,96	6,81+0,96	7,94+0,96	8,60+0,96
shear force level V1	**h= 160 mm**	≥ a_s [cm²] B500	1,12+0,86	1,69+1,72	2,25+1,72	2,54+1,72	2,82+1,72	3,11+1,72	3,40+1,72	3,97+1,72	4,30+1,72
/ V1±	**h= 250 mm**		2,25+0,86	3,37+1,72	4,50+1,72	5,08+1,72	5,65+1,72	6,21+1,72	6,81+1,72	7,94+1,72	8,60+1,72
shear force level V2	**h= 160 mm**	≥ a_s [cm²] B500	1,12+1,29	1,69+2,57	2,25+2,57	2,54+2,57	2,82+2,57	3,11+2,57	3,40+2,57	3,97+2,57	4,30+2,57
/ V2±	**h= 250 mm**		2,25+1,29	3,37+2,57	4,50+2,57	5,08+2,57	5,65+2,57	6,21+2,57	6,81+2,57	7,94+2,57	8,60+2,57
shear force level V3	**h= 160 mm**	≥ a_s [cm²] B500	1,12+1,72	1,69+3,43	2,25+3,43	2,54+3,43	2,82+3,43	3,11+3,43	3,40+3,43	3,97+3,43	4,30+3,43
/ V3±	**h= 250 mm**		2,25+1,72	3,37+3,43	4,50+3,43	5,08+3,43	5,65+3,43	6,21+3,43	6,81+3,43	7,94+3,43	8,60+3,43
shear force level V4	**h= 160 mm**	≥ a_s [cm²] B500	-	1,69+5,10	2,25+5,10	2,54+5,36	2,82+5,36	3,11+5,36	3,40+5,36	3,97+5,36	4,30+5,36
/ V4±	**h= 250 mm**		-	3,37+5,10	4,50+5,10	5,08+5,36	5,65+5,36	6,21+5,36	6,81+5,36	7,94+5,36	8,60+5,36
shear force level	**h= 160 mm**	≥ a_s [cm²] B500	1,12+0,48	1,69+0,96	2,25+0,96	2,54+0,96	2,82+0,96	3,11+0,96	3,40+0,96	3,97+0,96	4,30+0,96
V6±	**h= 250 mm**		2,25+0,48	3,37+0,96	4,50+0,96	5,08+0,96	5,65+0,96	6,21+0,96	6,81+0,96	7,94+0,96	8,60+0,96
shear force level	**h= 160 mm**	≥ a_s [cm²] B500	1,12+0,96	1,69+1,93	2,25+1,93	2,54+1,93	2,82+1,93	3,11+1,93	3,40+1,93	3,97+1,93	4,30+1,93
V7±	**h= 250 mm**		2,25+0,96	3,37+1,93	4,50+1,93	5,08+1,93	5,65+1,93	6,21+1,93	6,81+1,93	7,94+1,93	8,60+1,93
shear force level	**h= 160 mm**	≥ a_s [cm²] B500	1,12+2,01	1,69+4,02	2,25+4,02	2,54+4,02	2,82+4,02	3,11+4,02	3,40+4,02	3,97+4,02	4,30+4,02
V8±	**h= 250 mm**		2,25+2,01	3,37+4,02	4,50+4,02	5,08+4,02	5,65+4,02	6,21+4,02	6,81+4,02	7,94+4,02	8,60+4,02

design proposal

direct support

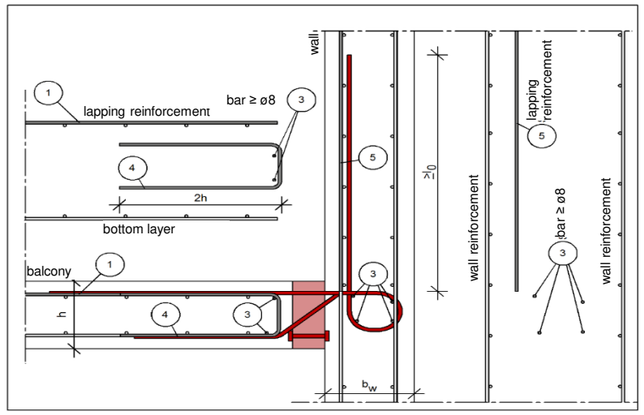

indirect support

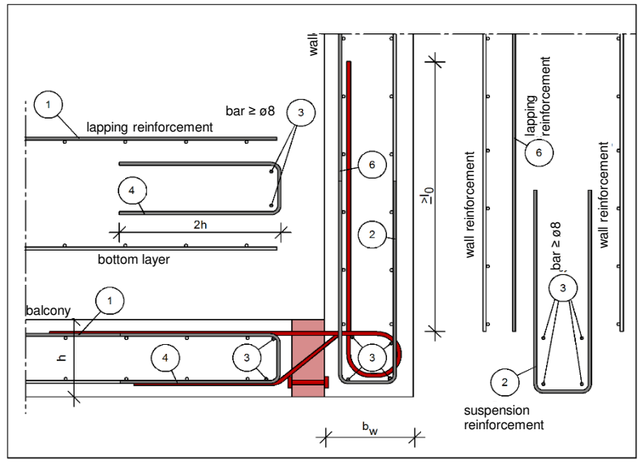

item ③+④ - structural reinforcement

In the slab edge of the u-bar reinforcement is respectively to arrange ≥ ø8 (item ③).
On the balcony side, it is recommended to design the edge reinforcement for the shear force V_{Ed} / f_{yd} ≥ ø6/250 mm according to EN 1992 (item ④ - vs. item ②).

The suggested lapping reinforcement (α_6=1,5) is selected (item ①) to transfer 100% of the M_{Rd} of the Egcobox® (height Egcobox® = height floor). An other reinforcement selection is possible.
In case of an other reinforcement selection shall be approved the lapping reinforcement in accordance with EN 1992. The reinforcement cross section or the lapping length can be derated in reference of utilization proportional M_{Ed} / M_{Rd}.
The lapping reinforcement must be approved by the structural engineer.

The proposed steel cross-section a_s (item ②) covers the maximum design transverse force V_{Rd} of the Egcobox®. In case of smaller actions, the edge reinforcement may be determined with V_{Ed} / f_{yd} ≥ ø6/250 mm.

Item ⑤ or item ⑥ applies to the specified required minimum widths of the wall (b_w) and the connection height (h) of the Egcobox.
In between, interpolation can be performed. For larger wall widths, a reduction of the required reinforcement is possible.
When selecting the reinforcement, the reinforcement rules and the lap lengths must be taken into account. Ø6/250 mm is recommended as the minimum reinforcement.

The specifications apply to good bonding conditions.

The specified connection reinforcement is required exclusively for the static transfer of the cutting forces from the cantilever slab connection.
The statically required beam-reinforcement is not taken into account and shown. This must be additionally dimensioned by the structural engineer.
The specified connection reinforcement is only a suggestion. The structural engineer in charge must check the feasibility of the design.
The distribution of the Egcobox® reinforcement and the required minimum wall widths must be observed.
In the case of alternating shear forces, the embedment length of the shear force bar must be taken into account when selecting the wall width.

Design table Egcobox® type MM -BH / -WU / -BHS / -WUS - C20/25

for cantilever slabs with height offset or wall connection for transmission of moment and shear force, insulation 80 mm

	Egcobox type			MM10-K	MM20	MM25	MM30	MM35	MM45	MM50	MM55	MM60	MM65	MM70	MM75	MM80
									-BH / -WU / -BHS / -WUS							
	length of element [mm]			500	1000	1000	1000	1000	1000	1000	1000	1000	1000	1000	1000	1000
	concrete cover [mm]			M_{Rd} [kNm/element]												
	C30	C35	C50													
height of connection [mm] good bonding conditions		**160**	175	-9,1	-13,6	-18,2	-20,4	-22,7	-25,0	-27,2	-31,8	-36,1	-39,7	-43,3	-43,3	-47,0
	160	165	**180**	-9,6	-14,4	-19,2	-21,6	-24,0	-26,4	-28,8	-33,6	-38,2	-42,1	-45,9	-45,9	-49,7
	165	170	185	-10,1	-15,2	-20,3	-22,8	-25,3	-27,9	-30,4	-35,5	-40,4	-44,4	-48,4	-48,4	-52,5
	170	175	190	-10,7	-16,0	-21,3	-24,0	-26,7	-29,3	-32,0	-37,3	-42,5	-46,7	-51,0	-51,0	-55,2
	175	**180**	195	-11,2	-16,8	-22,4	-25,2	-28,0	-30,8	-33,6	-39,2	-44,6	-49,1	-53,5	-53,5	-58,0
	180	185	**200**	-11,7	-17,6	-23,4	-26,4	-29,3	-32,2	-35,1	-41,0	-46,7	-51,4	-56,1	-56,1	-60,8
	185	190	205	-12,2	-18,4	-24,5	-27,5	-30,6	-33,7	-36,7	-42,9	-48,9	-53,8	-58,6	-58,6	-63,5
	190	195	210	-12,8	-19,2	-25,5	-28,7	-31,9	-35,1	-38,3	-44,7	-51,0	-56,1	-61,2	-61,2	-66,3
	195	**200**	215	-13,3	-19,9	-26,6	-29,9	-33,2	-36,6	-39,9	-46,5	-53,1	-58,4	-63,7	-63,7	-69,1
	200	205	**220**	-13,8	-20,7	-27,7	-31,1	-34,6	-38,0	-41,5	-48,4	-55,2	-60,8	-66,3	-66,3	-71,8
	205	210	225	-14,4	-21,5	-28,7	-32,3	-35,9	-39,5	-43,1	-50,2	-57,4	-63,1	-68,8	-68,8	-74,6
	210	215	230	-14,9	-22,3	-29,8	-33,5	-37,2	-40,9	-44,6	-52,1	-59,5	-65,4	-71,4	-71,4	-77,3
	215	**220**	235	-15,4	-23,1	-30,8	-34,7	-38,5	-42,4	-46,2	-53,9	-61,6	-67,8	-73,9	-73,9	-80,1
	220	225	**240**	-15,9	-23,9	-31,9	-35,9	-39,8	-43,8	-47,8	-55,8	-63,7	-70,1	-76,5	-76,5	-82,9
	225	230	245	-16,5	-24,7	-32,9	-37,0	-41,2	-45,3	-49,4	-57,6	-65,9	-72,5	-79,0	-79,0	-85,6
	230	235	250	-17,0	-25,5	-34,0	-38,2	-42,5	-46,7	-51,0	-59,5	-68,0	-74,8	-81,6	-81,6	-88,4
	235	**240**	255	-17,5	-26,3	-35,0	-39,4	-43,8	-48,2	-52,6	-61,3	-70,1	-77,1	-84,1	-84,1	-91,2
	240	245	**260**	-18,0	-27,1	-36,1	-40,6	-45,1	-49,6	-54,1	-63,2	-72,2	-79,5	-86,7	-86,7	-93,9
	245	250	265	-18,6	-27,9	-37,2	-41,8	-46,4	-51,1	-55,7	-65,0	-74,4	-81,8	-89,2	-89,2	-96,7
	250	255	270	-19,1	-28,7	-38,2	-43,0	-47,8	-52,5	-57,3	-66,9	-76,5	-84,1	-91,8	-91,8	-99,4
	255	**260**	275	-19,6	-29,4	-39,3	-44,2	-49,1	-54,0	-58,9	-68,7	-78,6	-86,5	-94,3	-94,3	-102,2
	260	265	**280**	-20,2	-30,2	-40,3	-45,4	-50,4	-55,4	-60,5	-70,6	-80,7	-88,8	-96,9	-96,9	-105,0
	265	270	285	-20,7	-31,0	-41,4	-46,5	-51,7	-56,9	-62,1	-72,4	-82,9	-91,2	-99,4	-99,4	-107,7
	270	275	290	-21,2	-31,8	-42,4	-47,7	-53,0	-58,3	-63,6	-74,3	-85,0	-93,5	-102,0	-102,0	-110,5
	275	**280**	295	-21,7	-32,6	-43,5	-48,9	-54,4	-59,8	-65,2	-76,1	-87,1	-95,8	-104,5	-104,5	-113,3
	280	285	**300**	-22,3	-33,4	-44,5	-50,1	-55,7	-61,2	-66,8	-78,0	-89,2	-98,2	-107,1	-107,1	-116,0
	285	290		-22,8	-34,2	-45,6	-51,3	-57,0	-62,7	-68,4	-79,8	-91,4	-100,5	-109,6	-109,6	-118,8
	290	295		-23,3	-35,0	-46,7	-52,5	-58,3	-64,1	-70,0	-81,6	-93,5	-102,8	-112,2	-112,2	-121,5
	295	**300**		-23,9	-35,8	-47,7	-53,7	-59,6	-65,6	-71,6	-83,5	-95,6	-105,2	-114,7	-114,7	-124,3
	300			-24,4	-36,6	-48,8	-54,9	-61,0	-67,1	-73,1	-85,3	-97,7	-107,5	-117,3	-117,3	-127,1

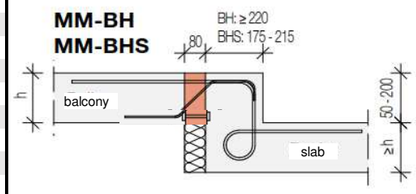

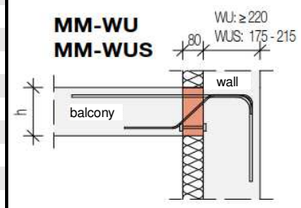

Shear force level		concrete cover [mm]			V_{Rd} [kN/element]													
		C30	C35	C50														
height of connection [mm] good bonding conditions	VS	160-190	160-195	175-210	21,0	41,9	41,9	41,9	41,9	41,9	41,9	41,9	41,9	41,9	41,9	41,9	41,9	41,9
		195-300	200-300	215-300	21,0	41,9	41,9	41,9	41,9	41,9	41,9	41,9	41,9	41,9	41,9	41,9	41,9	41,9
	V1	160-190	160-195	175-210	37,3	74,6	74,6	74,6	74,6	74,6	74,6	74,6	74,6	74,6	74,6	74,6	74,6	74,6
		195-300	200-300	215-300	37,3	74,6	74,6	74,6	74,6	74,6	74,6	74,6	74,6	74,6	74,6	74,6	74,6	74,6
	V2	160-190	160-195	175-210	55,9	111,9	111,9	111,9	111,9	111,9	111,9	111,9	111,9	111,9	111,9	111,9	111,9	111,9
		195-300	200-300	215-300	55,9	111,9	111,9	111,9	111,9	111,9	111,9	111,9	111,9	111,9	111,9	111,9	111,9	111,9
	V3	160-190	160-195	175-210	74,6	149,2	149,2	149,2	149,2	149,2	149,2	149,2	149,2	149,2	149,2	149,2	149,2	149,2
		195-300	200-300	215-300	74,6	149,2	149,2	149,2	149,2	149,2	149,2	149,2	149,2	149,2	149,2	149,2	149,2	149,2
	V4	175-190	180-195	195-210	-	233,1	233,1	233,1	233,1	233,1	233,1	233,1	233,1	233,1	233,1	233,1	233,1	233,1
		195-300	200-300	215-300	-	233,1	233,1	233,1	233,1	233,1	233,1	233,1	233,1	233,1	233,1	233,1	233,1	233,1
	V6±	160-190	160-195	175-210	+21/ -21	+41,9/ -41,9	+41,9/ -41,9	+41,9/ -41,9	+41,9/ -41,9	+41,9/ -41,9	+41,9/ -41,9	+41,9/ -41,9	+41,9/ -41,9	+41,9/ -41,9	+41,9/ -41,9	+41,9/ -41,9	+41,9/ -41,9	+41,9/ -41,9
		195-300	200-300	215-300	+21/ -21	+41,9/ -41,9	+41,9/ -41,9	+41,9/ -41,9	+41,9/ -41,9	+41,9/ -41,9	+41,9/ -41,9	+41,9/ -41,9	+41,9/ -41,9	+41,9/ -41,9	+41,9/ -41,9	+41,9/ -41,9	+41,9/ -41,9	+41,9/ -41,9
	V7±	160-190	160-195	175-210	+41,9/ -31,5	+83,9/ -62,9	+83,9/ -62,9	+83,9/ -62,9	+83,9/ -62,9	+83,9/ -62,9	+83,9/ -62,9	+111,9/ -74,6	+111,9/ -74,6	+111,9/ -74,6	+111,9/ -74,6	+111,9/ -74,6	+111,9/ -74,6	+111,9/ -74,6
		195-300	200-300	215-300	+41,9/ -31,5	+83,9/ -62,9	+83,9/ -62,9	+83,9/ -62,9	+83,9/ -62,9	+83,9/ -62,9	+83,9/ -62,9	+111,9/ -74,6	+111,9/ -74,6	+111,9/ -74,6	+111,9/ -74,6	+111,9/ -74,6	+111,9/ -74,6	+111,9/ -74,6
	V8±	175-190	180-195	195-210	+87,4/ -87,4	+174,8/ -174,8	+174,8/ -174,8	+174,8/ -174,8	+174,8/ -174,8	+174,8/ -174,8	+174,8/ -174,8	+174,8/ -174,8	+174,8/ -174,8	+174,8/ -174,8	+174,8/ -174,8	+174,8/ -174,8	+174,8/ -174,8	+174,8/ -174,8
		195-300	200-300	215-300	+87,4/ -87,4	+174,8/ -174,8	+174,8/ -174,8	+174,8/ -174,8	+174,8/ -174,8	+174,8/ -174,8	+174,8/ -174,8	+174,8/ -174,8	+174,8/ -174,8	+174,8/ -174,8	+174,8/ -174,8	+174,8/ -174,8	+174,8/ -174,8	+174,8/ -174,8

Shear force level VS to V4 also possible with lifting shear force (-21.0 kN/element depending on height of connection/concrete cover) (designation: VS±, V1±, V2±, V3± or V4±)

Reinforcement Egcobox® type MM -BH / -WU / -BHS / -WUS

Egcobox type	MM10-K	MM20	MM25	MM30	MM35	MM45	MM50	MM55	MM60	MM65	MM70	MM75	MM80
	-BH / -WU / -BHS / -WUS												
length of element [mm]	**500**	**1000**	**1000**	**1000**	**1000**	**1000**	**1000**	**1000**	**1000**	**1000**	**1000**	**1000**	**1000**
wall / beam width b_w: -HV / - WO / -BH / -WU [mm]	**≥ 220**												
wall / beam width b_w: -BHS / -WUS [mm]	**$175 \leq b_w < 220$**												
tensile bars	4 ø 8	6 ø 8	8 ø 8	9 ø 8	10 ø 8	11 ø 8	12 ø 8	14 ø 8	10 ø 10	11 ø 10	12 ø 10	12 ø 10	13 ø 10
length of tensile bars [mm]	depending on bending form												
compression bearings	2 ø 12	4 ø 12	4 ø 12	4 ø 12	5 ø 12	5 ø 12	6 ø 12	7 ø 12	8 ø 12	9 ø 12	10 ø 12	11 ø 12	12 ø 12
shear force bars VS	2 ø 6	4 ø 6	4 ø 6	4 ø 6	4 ø 6	4 ø 6	4 ø 6	4 ø 6	4 ø 6	4 ø 6	4 ø 6	4 ø 6	4 ø 6
shear force bars V1	2 ø 8	4 ø 8	4 ø 8	4 ø 8	4 ø 8	4 ø 8	4 ø 8	4 ø 8	4 ø 8	4 ø 8	4 ø 8	4 ø 8	4 ø 8
shear force bars V2	3 ø 8	6 ø 8	6 ø 8	6 ø 8	6 ø 8	6 ø 8	6 ø 8	6 ø 8	6 ø 8	6 ø 8	6 ø 8	6 ø 8	6 ø 8
shear force bars V3	4 ø 8	8 ø 8	8 ø 8	8 ø 8	8 ø 8	8 ø 8	8 ø 8	8 ø 8	8 ø 8	8 ø 8	8 ø 8	8 ø 8	8 ø 8
shear force bars V4	-	8 ø 10	8 ø 10	8 ø 10	8 ø 10	8 ø 10	8 ø 10	8 ø 10	8 ø 10	8 ø 10	8 ø 10	8 ø 10	8 ø 10
shear force bars VS±	-	4 ø6 / 2 ø6	4 ø6 / 2 ø6	4 ø6 / 2 ø6	4 ø6 / 2 ø6	4 ø6 / 2 ø6	4 ø6 / 2 ø6	4 ø6 / 2 ø6	4 ø6 / 2 ø6	4 ø6 / 2 ø6	4 ø6 / 2 ø6	4 ø6 / 2 ø6	4 ø6 / 2 ø6
shear force bars V1±	-	4 ø8 / 2 ø6	4 ø8 / 2 ø6	4 ø8 / 2 ø6	4 ø8 / 2 ø6	4 ø8 / 2 ø6	4 ø8 / 2 ø6	4 ø8 / 2 ø6	4 ø8 / 2 ø6	4 ø8 / 2 ø6	4 ø8 / 2 ø6	4 ø8 / 2 ø6	4 ø8 / 2 ø6
shear force bars V2±	-	6 ø8 / 2 ø6	6 ø8 / 2 ø6	6 ø8 / 2 ø6	6 ø8 / 2 ø6	6 ø8 / 2 ø6	6 ø8 / 2 ø6	6 ø8 / 2 ø6	6 ø8 / 2 ø6	6 ø8 / 2 ø6	6 ø8 / 2 ø6	6 ø8 / 2 ø6	6 ø8 / 2 ø6
shear force bars V3±	-	8 ø8 / 2 ø6	8 ø8 / 2 ø6	8 ø8 / 2 ø6	8 ø8 / 2 ø6	8 ø8 / 2 ø6	8 ø8 / 2 ø6	8 ø8 / 2 ø6	8 ø8 / 2 ø6	8 ø8 / 2 ø6	8 ø8 / 2 ø6	8 ø8 / 2 ø6	8 ø8 / 2 ø6
shear force bars V4±	-	8 ø10 / 2 ø6	8 ø10 / 2 ø6	8 ø10 / 2 ø6	8 ø10 / 2 ø6	8 ø10 / 2 ø6	8 ø10 / 2 ø6	8 ø10 / 2 ø6	8 ø10 / 2 ø6	8 ø10 / 2 ø6	8 ø10 / 2 ø6	8 ø10 / 2 ø6	8 ø10 / 2 ø6
shear force bars V6±	2 ø6 / 2 ø6	4 ø6 / 4 ø6	4 ø6 / 4 ø6	4 ø6 / 4 ø6	4 ø6 / 4 ø6	4 ø6 / 4 ø6	4 ø6 / 4 ø6	4 ø6 / 4 ø6	4 ø6 / 4 ø6	4 ø6 / 4 ø6	4 ø6 / 4 ø6	4 ø6 / 4 ø6	4 ø6 / 4 ø6
shear force bars V7±	4 ø6 / 3 ø6	8 ø6 / 6 ø6	8 ø6 / 6 ø6	8 ø6 / 6 ø6	8 ø6 / 6 ø6	8 ø6 / 6 ø6	8 ø6 / 6 ø6	6 ø8 / 4 ø8	6 ø8 / 4 ø8	6 ø8 / 4 ø8	6 ø8 / 4 ø8	6 ø8 / 4 ø8	6 ø8 / 4 ø8
shear force bars V8±	3 ø10 / 3 ø10	6 ø10 / 6 ø10	6 ø10 / 6 ø10	6 ø10 / 6 ø10	6 ø10 / 6 ø10	6 ø10 / 6 ø10	6 ø10 / 6 ø10	6 ø10 / 6 ø10	6 ø10 / 6 ø10	6 ø10 / 6 ø10	6 ø10 / 6 ø10	6 ø10 / 6 ø10	6 ø10 / 6 ø10
applicable expansion joint distances [m]	**11,7**	**11,7**	**11,7**	**11,7**	**11,7**	**11,7**	**11,7**	**11,7**	**11,7**	**11,7**	**11,7**	**11,7**	**11,7**

Torsion of the slab in the area of the insulation joint - Egcobox® type MM -BH / -WU / -BHS / -WUS

Egcobox type			MM10-K	MM20	MM25	MM30	MM35	MM45	MM50	MM55	MM60	MM65	MM70	MM75	MM80
			-BH / -WU / -BHS / -WUS												
length of element [mm]			**500**	**1000**	**1000**	**1000**	**1000**	**1000**	**1000**	**1000**	**1000**	**1000**	**1000**	**1000**	**1000**
concrete cover [mm]			**banking factor k [1/kNm]**												
C30	**C35**	**C50**													
	160	175	1,308	0,822	0,654	0,598	0,523	0,486	0,436	0,374	0,385	0,348	0,318	0,313	0,288
160	165	**180**	1,168	0,734	0,584	0,534	0,467	0,434	0,389	0,334	0,343	0,311	0,284	0,279	0,257
165	170	185	1,049	0,660	0,525	0,480	0,420	0,390	0,350	0,300	0,308	0,279	0,255	0,250	0,231
170	175	190	0,948	0,596	0,474	0,433	0,379	0,353	0,316	0,271	0,278	0,252	0,230	0,226	0,208
175	**180**	195	0,861	0,541	0,430	0,393	0,344	0,320	0,287	0,246	0,252	0,228	0,209	0,205	0,189
180	185	**200**	0,785	0,493	0,392	0,359	0,314	0,292	0,262	0,224	0,230	0,208	0,190	0,187	0,172
185	190	205	0,719	0,452	0,359	0,329	0,287	0,267	0,240	0,205	0,210	0,190	0,174	0,171	0,157
190	195	210	0,661	0,415	0,330	0,302	0,264	0,246	0,220	0,189	0,193	0,175	0,160	0,157	0,145
195	**200**	215	0,609	0,383	0,305	0,278	0,244	0,227	0,203	0,174	0,178	0,161	0,147	0,145	0,133
200	205	**220**	0,564	0,354	0,282	0,258	0,225	0,210	0,188	0,161	0,165	0,149	0,136	0,134	0,123
205	210	225	0,523	0,329	0,261	0,239	0,209	0,194	0,174	0,149	0,153	0,138	0,126	0,124	0,114
210	215	230	0,486	0,306	0,243	0,222	0,195	0,181	0,162	0,139	0,142	0,128	0,117	0,115	0,106
215	**220**	235	0,454	0,285	0,227	0,207	0,181	0,169	0,151	0,130	0,132	0,120	0,109	0,107	0,099
220	225	**240**	0,424	0,267	0,212	0,194	0,170	0,158	0,141	0,121	0,124	0,112	0,102	0,100	0,093
225	230	245	0,397	0,250	0,199	0,182	0,159	0,148	0,132	0,114	0,116	0,105	0,096	0,094	0,087
230	235	250	0,373	0,235	0,187	0,171	0,149	0,139	0,124	0,107	0,109	0,098	0,090	0,088	0,081
235	**240**	255	0,351	0,221	0,175	0,160	0,140	0,131	0,117	0,100	0,102	0,092	0,084	0,083	0,076
240	245	**260**	0,331	0,208	0,165	0,151	0,132	0,123	0,110	0,094	0,096	0,087	0,080	0,078	0,072
245	250	265	0,312	0,196	0,156	0,143	0,125	0,116	0,104	0,089	0,091	0,082	0,075	0,074	0,068
250	255	270	0,295	0,186	0,148	0,135	0,118	0,110	0,098	0,084	0,086	0,078	0,071	0,070	0,064
255	**260**	275	0,280	0,176	0,140	0,128	0,112	0,104	0,093	0,080	0,081	0,074	0,067	0,066	0,061
260	265	**280**	0,265	0,167	0,133	0,121	0,106	0,099	0,088	0,076	0,077	0,070	0,064	0,063	0,058
265	270	285	0,252	0,158	0,126	0,115	0,101	0,094	0,084	0,072	0,073	0,066	0,060	0,059	0,055
270	275	290	0,239	0,150	0,120	0,109	0,096	0,089	0,080	0,068	0,070	0,063	0,057	0,056	0,052
275	**280**	295	0,228	0,143	0,114	0,104	0,091	0,085	0,076	0,065	0,066	0,060	0,055	0,054	0,050
280	285	**300**	0,217	0,137	0,109	0,099	0,087	0,081	0,072	0,062	0,063	0,057	0,052	0,051	0,047
285	290		0,207	0,130	0,104	0,095	0,083	0,077	0,069	0,059	0,060	0,054	0,050	0,049	0,045
290	295		0,198	0,124	0,099	0,091	0,079	0,074	0,066	0,057	0,057	0,052	0,047	0,047	0,043
295	**300**		0,189	0,119	0,095	0,087	0,076	0,070	0,063	0,054	0,055	0,050	0,045	0,045	0,041
300			0,181	0,114	0,091	0,083	0,072	0,067	0,060	0,052	0,053	0,048	0,043	0,043	0,039

height of connection [mm] good bonding conditions

Rotation spring stiffness Egcobox® type MM -BH / -WU / -BHS / -WUS

	Egcobox type			MM10-K	MM20	MM25	MM30	MM35	MM45	MM50	MM55	MM60	MM65	MM70	MM75	MM80
				-BH / -WU / -BHS / -WUS												
	length of element [mm]			500	1000	1000	1000	1000	1000	1000	1000	1000	1000	1000	1000	1000
	concrete cover [mm]			Rotation spring stiffness [kNm/rad/Element]												
	C30	C35	C50													
height of connection [mm] good bonding conditions		**160**	175	765	1217	1530	1673	1912	2056	2294	2677	2598	2871	3143	3199	3470
	160	165	**180**	856	1362	1713	1873	2141	2302	2569	2997	2913	3218	3523	3586	3890
	165	170	185	953	1516	1906	2085	2382	2562	2859	3335	3245	3586	3926	3996	4334
	170	175	190	1055	1678	2110	2307	2637	2836	3164	3692	3596	3973	4350	4427	4802
	175	**180**	195	1162	1848	2324	2542	2905	3124	3486	4066	3965	4381	4796	4881	5294
	180	185	**200**	1274	2027	2548	2787	3185	3425	3822	4459	4351	4808	5263	5357	5811
	185	190	205	1391	2214	2783	3044	3478	3741	4174	4870	4756	5255	5753	5855	6351
	190	195	210	1514	2409	3028	3312	3785	4070	4542	5299	5178	5721	6264	6375	6915
	195	**200**	215	1642	2612	3283	3591	4104	4414	4925	5746	5619	6208	6797	6918	7503
	200	205	**220**	1775	2823	3549	3882	4436	4771	5324	6211	6077	6715	7351	7482	8116
	205	210	225	1913	3043	3825	4184	4781	5142	5738	6694	6554	7241	7928	8069	8752
	210	215	230	2056	3271	4112	4497	5139	5527	6167	7195	7048	7788	8526	8678	9412
	215	**220**	235	2204	3507	4408	4822	5510	5926	6612	7715	7561	8354	9146	9308	10097
	220	225	**240**	2358	3751	4715	5157	5894	6339	7073	8252	8091	8940	9787	9961	10805
	225	230	245	2516	4003	5033	5505	6291	6766	7549	8807	8640	9546	10451	10637	11537
	230	235	250	2680	4264	5361	5863	6701	7206	8041	9381	9206	10172	11136	11334	12294
	235	**240**	255	2849	4533	5699	6233	7123	7661	8548	9973	9790	10817	11843	12053	13074
	240	245	**260**	3024	4810	6047	6614	7559	8129	9071	10583	10393	11483	12571	12795	13878
	245	250	265	3203	5096	6406	7007	8008	8611	9609	11211	11013	12168	13322	13559	14707
	250	255	270	3388	5389	6775	7410	8469	9108	10163	11857	11651	12873	14094	14344	15559
	255	**260**	275	3577	5691	7155	7825	8943	9618	10732	12521	12308	13598	14888	15152	16435
	260	265	**280**	3772	6001	7545	8252	9431	10142	11317	13203	12982	14343	15703	15983	17336
	265	270	285	3972	6320	7945	8689	9931	10680	11917	13903	13674	15108	16540	16835	18260
	270	275	290	4178	6646	8355	9138	10444	11232	12533	14622	14384	15893	17400	17709	19209
	275	**280**	295	4388	6981	8776	9599	10970	11797	13164	15358	15113	16698	18280	18606	20181
	280	285	**300**	4604	7324	9207	10070	11509	12377	13811	16113	15859	17522	19183	19524	21178
	285	290		4824	7675	9649	10553	12061	12971	14473	16885	16623	18366	20107	20465	22198
	290	295		5050	8035	10101	11048	12626	13578	15151	17676	17405	19231	21054	21428	23243
	295	**300**		5281	8402	10563	11553	13204	14199	15844	18485	18205	20115	22021	22413	24311
	300			5518	8778	11035	12070	13794	14835	16553	19312	19023	21019	23011	23420	25403

On-site reinforcement Egcobox® type MM-BH / BHS - C20/25

for balconies with balcony offset

Egcobox type BH / BHS	MM10-K	MM20	MM25	MM30	MM35	MM45	MM50	MM55	MM60	MM65	MM70	MM75	MM80
length of element [mm]	**500**	**1000**	**1000**	**1000**	**1000**	**1000**	**1000**	**1000**	**1000**	**1000**	**1000**	**1000**	**1000**
reqired minimum width of joist b_w [mm]	175	175	175	175	175	175	175	175	175	175	175	175	175
Egcobox ø rebar [mm]	ø 8	ø 8	ø 8	ø 8	ø 8	ø 8	ø 8	ø 8	ø 10	ø 10	ø 10	ø 10	ø 10
Egcobox l_0 rebar [mm]	475	475	475	475	475	475	475	475	612	612	612	612	612
item ① - lapping reinforcement / element													
≥ as [cm²] B500	2,43	3,64	4,86	5,46	6,07	6,68	7,28	8,50	9,77	10,75	11,73	11,73	11,73
suggested on-site reinforcement [mm]	ø 10	ø 10	ø 10	ø 10	ø 10	ø 10	ø 10	ø 10	ø 12	ø 10	ø 10	ø 10	ø 12
item ② - balcony-side suspension reinforcement shear force / element													
shear force level VS / VS± ≥ a_s [cm²] B500	-	1,12	1,12	1,12	1,12	1,12	1,12	1,12	1,12	1,12	1,12	1,12	1,12
shear force level V1 / V1± ≥ a_s [cm²] B500	-	1,72	1,72	1,72	1,72	1,72	1,72	1,72	1,72	1,72	1,72	1,72	1,72
shear force level V2 / V2± ≥ a_s [cm²] B500	-	2,57	2,57	2,57	2,57	2,57	2,57	2,57	2,57	2,57	2,57	2,57	2,57
shear force level V3 / V3± ≥ a_s [cm²] B500	-	3,43	3,43	3,43	3,43	3,43	3,43	3,43	3,43	3,43	3,43	3,43	3,43
shear force level V4 / V4± ≥ a_s [cm²] B500	-	5,36	5,36	5,36	5,36	5,36	5,36	5,36	5,36	5,36	5,36	5,36	5,36
shear force level V6± ≥ a_s [cm²] B500	0,56	1,12	1,12	1,12	1,12	1,12	1,12	1,12	1,12	1,12	1,12	1,12	1,12
shear force level V7± ≥ a_s [cm²] B500	0,96	1,93	1,93	1,93	1,93	1,93	1,93	1,93	1,93	1,93	1,93	1,93	1,93
shear force level V8± ≥ a_s [cm²] B500	2,01	4,02	4,02	4,02	4,02	4,02	4,02	4,02	4,02	4,02	4,02	4,02	4,02

MM-BHS: minimum width of joist b_w 175 mm (concrete cover 30 mm)

item ⑤ - link reinforcement slabsides / element at direct support (all shear force level - a_s lapping reinforcement)														
offset balcony	**a≤ 135 mm**	≥ a_s [cm²] B500	1,91	2,87	3,83	4,34	4,82	5,30	5,82	6,79	7,81	8,53	9,38	9,38	9,38
offset balcony	**a= 260 mm**	≥ a_s [cm²] B500	4,30	6,46	8,61	9,75	10,84	11,92	13,10	15,28	17,58	19,20	21,10	21,10	21,10
item ⑥ - link reinforcement / element at indirect support (a_s lapping reinforcement + a_s transverse shear force)														
shear force level VS / VS±	**a≤ 135 mm**	≥ a_s [cm²] B500	1,91+0,48	2,87+0,96	3,83+0,96	4,34+0,96	4,82+0,96	5,30+0,96	5,82+0,96	6,79+0,96	7,81+0,96	8,53+0,96	9,38+0,96	9,38+0,96	10,16+0,96
	a= 260 mm		4,30+0,48	6,46+0,96	8,61+0,96	9,75+0,96	10,84+0,96	11,92+0,96	13,10+0,96	15,28+0,96	17,58+0,96	19,20+0,96	21,10+0,96	21,10+0,96	22,85+0,96
shear force level V1 / V1±	**a≤ 135 mm**	≥ a_s [cm²] B500	1,91+0,86	2,87+1,72	3,83+1,72	4,34+1,72	4,82+1,72	5,30+1,72	5,82+1,72	6,79+1,72	7,81+1,72	8,53+1,72	9,38+1,72	9,38+1,72	10,16+1,72
	a= 260 mm		4,30+0,86	6,46+1,72	8,61+1,72	9,75+1,72	10,84+1,72	11,92+1,72	13,10+1,72	15,28+1,72	17,58+1,72	19,20+1,72	21,10+1,72	21,10+1,72	22,85+1,72
shear force level V2 / V2±	**a≤ 135 mm**	≥ a_s [cm²] B500	1,91+1,29	2,87+2,57	3,83+2,57	4,34+2,57	4,82+2,57	5,30+2,57	5,82+2,57	6,79+2,57	7,81+2,57	8,53+2,57	9,38+2,57	9,38+2,57	10,16+2,57
	a= 260 mm		4,30+1,29	6,46+2,57	8,61+2,57	9,75+2,57	10,84+2,57	11,92+2,57	13,10+2,57	15,28+2,57	17,58+2,57	19,20+2,57	21,10+2,57	21,10+2,57	22,85+2,57
shear force level V3 / V3±	**a≤ 135 mm**	≥ a_s [cm²] B500	1,91+1,72	2,87+3,43	3,83+3,43	4,34+3,43	4,82+3,43	5,30+3,43	5,82+3,43	6,79+3,43	7,81+3,43	8,53+3,43	9,38+3,43	9,38+3,43	10,16+3,43
	a= 260 mm		4,30+1,72	6,46+3,43	8,61+3,43	9,75+3,43	10,84+3,43	11,92+3,43	13,10+3,43	15,28+3,43	17,58+3,43	19,20+3,43	21,10+3,43	21,10+3,43	22,85+3,43
shear force level V4 / V4±	**a≤ 135 mm**	≥ a_s [cm²] B500	-	2,87+5,36	3,83+5,36	4,34+5,36	4,82+5,36	5,30+5,36	5,82+5,36	6,79+5,36	7,81+5,36	8,53+5,36	9,38+5,36	9,38+5,36	10,16+5,36
	a= 260 mm		-	6,46+5,36	8,61+5,36	9,75+5,36	10,84+5,36	11,92+5,36	13,10+5,36	15,28+5,36	17,58+5,36	19,20+5,36	21,10+5,36	21,10+5,36	22,85+5,36
shear force level V6±	**a≤ 135 mm**	≥ a_s [cm²] B500	1,91+0,48	2,87+0,96	3,83+0,96	4,34+0,96	4,82+0,96	5,30+0,96	5,82+0,96	6,79+0,96	7,81+0,96	8,53+0,96	9,38+0,96	9,38+0,96	10,16+0,96
	a= 260 mm		4,30+0,48	6,46+0,96	8,61+0,96	9,75+0,96	10,84+0,96	11,92+0,96	13,10+0,96	15,28+0,96	17,58+0,96	19,20+0,96	21,10+0,96	21,10+0,96	22,85+0,96
shear force level V7±	**a≤ 135 mm**	≥ a_s [cm²] B500	1,91+0,96	2,87+1,93	3,83+1,93	4,34+1,93	4,82+1,93	5,30+1,93	5,82+1,93	6,79+1,93	7,81+1,93	8,53+1,93	9,38+1,93	9,38+1,93	10,16+1,93
	a= 260 mm		4,30+0,96	6,46+1,93	8,61+1,93	9,75+1,93	10,84+1,93	11,92+1,93	13,10+1,93	15,28+1,93	17,58+1,93	19,20+1,93	21,10+1,93	21,10+1,93	22,85+1,93
shear force level V8±	**a≤ 135 mm**	≥ a_s [cm²] B500	1,91+2,01	2,87+4,02	3,83+4,02	4,34+4,02	4,82+4,02	5,30+4,02	5,82+4,02	6,79+4,02	7,81+4,02	8,53+4,02	9,38+4,02	9,38+4,02	10,16+4,02
	a= 260 mm		4,30+2,01	6,46+4,02	8,61+4,02	9,75+4,02	10,84+4,02	11,92+4,02	13,10+4,02	15,28+4,02	17,58+4,02	19,20+4,02	21,10+4,02	21,10+4,02	22,85+4,02

MM-BHS: minimum width of joist b_w 200 mm (concrete cover 30 mm)

item ⑤ - link reinforcement slabsides / element at direct support (all shear force level - a_s lapping reinforcement)														
offset balcony	**a≤ 135 mm**	≥ a_s [cm²] B500	1,62	2,44	3,25	3,68	4,09	4,50	4,93	5,76	6,62	7,28	7,95	7,95	8,61
offset balcony	**a= 260 mm**	≥ a_s [cm²] B500	3,66	5,48	7,31	8,28	9,20	10,12	11,10	12,95	14,90	16,39	17,88	17,88	19,37
item ⑥ - link reinforcement / element at indirect support (a_s lapping reinforcement + a_s transverse shear force)														
shear force level VS / VS±	**a≤ 135 mm**	≥ a_s [cm²] B500	1,62+0,48	2,44+0,96	3,25+0,96	3,68+0,96	4,09+0,96	4,50+0,96	4,93+0,96	5,76+0,96	6,62+0,96	7,28+0,96	7,95+0,96	7,95+0,96	8,61+0,96
	a= 260 mm		3,66+0,48	5,48+0,96	7,31+0,96	8,28+0,96	9,20+0,96	10,12+0,96	11,10+0,96	12,95+0,96	14,90+0,96	16,39+0,96	17,88+0,96	17,88+0,96	19,37+0,96
shear force level V1 / V1±	**a≤ 135 mm**	≥ a_s [cm²] B500	1,62+0,86	2,44+1,72	3,25+1,72	3,68+1,72	4,09+1,72	4,50+1,72	4,93+1,72	5,76+1,72	6,62+1,72	7,28+1,72	7,95+1,72	7,95+1,72	8,61+1,72
	a= 260 mm		3,66+0,86	5,48+1,72	7,31+1,72	8,28+1,72	9,20+1,72	10,12+1,72	11,10+1,72	12,95+1,72	14,90+1,72	16,39+1,72	17,88+1,72	17,88+1,72	19,37+1,72
shear force level V2 / V2±	**a≤ 135 mm**	≥ a_s [cm²] B500	1,62+1,29	2,44+2,57	3,25+2,57	3,68+2,57	4,09+2,57	4,50+2,57	4,93+2,57	5,76+2,57	6,62+2,57	7,28+2,57	7,95+2,57	7,95+2,57	8,61+2,57
	a= 260 mm		3,66+1,29	5,48+2,57	7,31+2,57	8,28+2,57	9,20+2,57	10,12+2,57	11,10+2,57	12,95+2,57	14,90+2,57	16,39+2,57	17,88+2,57	17,88+2,57	19,37+2,57
shear force level V3 / V3±	**a≤ 135 mm**	≥ a_s [cm²] B500	1,62+1,72	2,44+3,43	3,25+3,43	3,68+3,43	4,09+3,43	4,50+3,43	4,93+3,43	5,76+3,43	6,62+3,43	7,28+3,43	7,95+3,43	7,95+3,43	8,61+3,43
	a= 260 mm		3,66+1,72	5,48+3,43	7,31+3,43	8,28+3,43	9,20+3,43	10,12+3,43	11,10+3,43	12,95+3,43	14,90+3,43	16,39+3,43	17,88+3,43	17,88+3,43	19,37+3,43
shear force level V4 / V4±	**a≤ 135 mm**	≥ a_s [cm²] B500	-	2,44+5,36	3,25+5,36	3,68+5,36	4,09+5,36	4,50+5,36	4,93+5,36	5,76+5,36	6,62+5,36	7,28+5,36	7,95+5,36	7,95+5,36	8,61+5,36
	a= 260 mm		-	5,48+5,36	7,31+5,36	8,28+5,36	9,20+5,36	10,12+5,36	11,10+5,36	12,95+5,36	14,90+5,36	16,39+5,36	17,88+5,36	17,88+5,36	19,37+5,36
shear force level V6±	**a≤ 135 mm**	≥ a_s [cm²] B500	1,62+0,48	2,44+0,96	3,25+0,96	3,68+0,96	4,09+0,96	4,50+0,96	4,93+0,96	5,76+0,96	6,62+0,96	7,28+0,96	7,95+0,96	7,95+0,96	8,61+0,96
	a= 260 mm		3,66+0,48	5,48+0,96	7,31+0,96	8,28+0,96	9,20+0,96	10,12+0,96	11,10+0,96	12,95+0,96	14,90+0,96	16,39+0,96	17,88+0,96	17,88+0,96	19,37+0,96
shear force level V7±	**a≤ 135 mm**	≥ a_s [cm²] B500	1,62+0,96	2,44+1,93	3,25+1,93	3,68+1,93	4,09+1,93	4,50+1,93	4,93+1,93	5,76+1,93	6,62+1,93	7,28+1,93	7,95+1,93	7,95+1,93	8,61+1,93
	a= 260 mm		3,66+0,96	5,48+1,93	7,31+1,93	8,28+1,93	9,20+1,93	10,12+1,93	11,10+1,93	12,95+1,93	14,90+1,93	16,39+1,93	17,88+1,93	17,88+1,93	19,37+1,93
shear force level V8±	**a≤ 135 mm**	≥ a_s [cm²] B500	1,62+2,01	2,44+4,02	3,25+4,02	3,68+4,02	4,09+4,02	4,50+4,02	4,93+4,02	5,76+4,02	6,62+4,02	7,28+4,02	7,95+4,02	7,95+4,02	8,61+4,02
	a= 260 mm		3,66+2,01	5,48+4,02	7,31+4,02	8,28+4,02	9,20+4,02	10,12+4,02	11,10+4,02	12,95+4,02	14,90+4,02	16,39+4,02	17,88+4,02	17,88+4,02	19,37+4,02

Egcobox type BH / BHS	MM10-K	MM20	MM25	MM30	MM35	MM45	MM50	MM55	MM60	MM65	MM70	MM75	MM80
Elementlänge l [mm]	**500**	**1000**	**1000**	**1000**	**1000**	**1000**	**1000**	**1000**	**1000**	**1000**	**1000**	**1000**	**1000**

MM-BH: minimum width of joist b_w 220 mm (concrete cover 30 mm)

item ⑤ - link reinforcement slabsides / element at direct support (all shear force level - a_s lapping reinforcement)														
offset balcony	**a≤ 135 mm**	≥ a_s [cm²] B500	1,45	2,18	2,90	3,28	3,65	4,01	4,40	5,13	5,90	6,49	7,08	7,08	7,67
offset balcony	**a= 260 mm**	≥ a_s [cm²] B500	3,26	4,89	6,53	7,38	8,20	9,02	9,90	11,54	13,28	14,61	15,94	15,94	17,27
item ⑥ - link reinforcement / element at indirect support (a_s lapping reinforcement + a_s transverse shear force)														
shear force level	**a≤ 135 mm**	≥ a_s [cm²] B500	1,45+0,48	2,18+0,96	2,90+0,96	3,28+0,96	3,65+0,96	4,01+0,96	4,40+0,96	5,13+0,96	5,90+0,96	6,49+0,96	7,08+0,96	7,08+0,96	7,67+0,96
VS / VS±	**a= 260 mm**		3,26+0,48	4,89+0,96	6,53+0,96	7,38+0,96	8,20+0,96	9,02+0,96	9,90+0,96	11,54+0,96	13,28+0,96	14,61+0,96	15,94+0,96	15,94+0,96	17,27+0,96
shear force level	**a≤ 135 mm**	≥ a_s [cm²] B500	1,45+0,86	2,18+1,72	2,90+1,72	3,28+1,72	3,65+1,72	4,01+1,72	4,40+1,72	5,13+1,72	5,90+1,72	6,49+1,72	7,08+1,72	7,08+1,72	7,67+1,72
V1 / V1±	**a= 260 mm**		3,26+0,86	4,89+1,72	6,53+1,72	7,38+1,72	8,20+1,72	9,02+1,72	9,90+1,72	11,54+1,72	13,28+1,72	14,61+1,72	15,94+1,72	15,94+1,72	17,27+1,72
shear force level	**a≤ 135 mm**	≥ a_s [cm²] B500	1,45+1,29	2,18+2,57	2,90+2,57	3,28+2,57	3,65+2,57	4,01+2,57	4,40+2,57	5,13+2,57	5,90+2,57	6,49+2,57	7,08+2,57	7,08+2,57	7,67+2,57
V2 / V2±	**a= 260 mm**		3,26+1,29	4,89+2,57	6,53+2,57	7,38+2,57	8,20+2,57	9,02+2,57	9,90+2,57	11,54+2,57	13,28+2,57	14,61+2,57	15,94+2,57	15,94+2,57	17,27+2,57
shear force level	**a≤ 135 mm**	≥ a_s [cm²] B500	1,45+1,72	2,18+3,43	2,90+3,43	3,28+3,43	3,65+3,43	4,01+3,43	4,40+3,43	5,13+3,43	5,90+3,43	6,49+3,43	7,08+3,43	7,08+3,43	7,67+3,43
V3 / V3±	**a= 260 mm**		3,26+1,72	4,89+3,43	6,53+3,43	7,38+3,43	8,20+3,43	9,02+3,43	9,90+3,43	11,54+3,43	13,28+3,43	14,61+3,43	15,94+3,43	15,94+3,43	17,27+3,43
shear force level	**a≤ 135 mm**	≥ a_s [cm²] B500	-	2,18+5,36	2,90+5,36	3,28+5,36	3,65+5,36	4,01+5,36	4,40+5,36	5,13+5,36	5,90+5,36	6,49+5,36	7,08+5,36	7,08+5,36	7,67+5,36
V4 / V4±	**a= 260 mm**		-	4,89+5,36	6,53+5,36	7,38+5,36	8,20+5,36	9,02+5,36	9,90+5,36	11,54+5,36	13,28+5,36	14,61+5,36	15,94+5,36	15,94+5,36	17,27+5,36
shear force level	**a≤ 135 mm**	≥ a_s [cm²] B500	1,45+0,48	2,18+0,96	2,90+0,96	3,28+0,96	3,65+0,96	4,01+0,96	4,40+0,96	5,13+0,96	5,90+0,96	6,49+0,96	7,08+0,96	7,08+0,96	7,67+0,96
V6±	**a= 260 mm**		3,26+0,48	4,89+0,96	6,53+0,96	7,38+0,96	8,20+0,96	9,02+0,96	9,90+0,96	11,54+0,96	13,28+0,96	14,61+0,96	15,94+0,96	15,94+0,96	17,27+0,96
shear force level	**a≤ 135 mm**	≥ a_s [cm²] B500	1,45+0,96	2,18+1,93	2,90+1,93	3,28+1,93	3,65+1,93	4,01+1,93	4,40+1,93	5,13+1,93	5,90+1,93	6,49+1,93	7,08+1,93	7,08+1,93	7,67+1,93
V7±	**a= 260 mm**		3,26+0,96	4,89+1,93	6,53+1,93	7,38+1,93	8,20+1,93	9,02+1,93	9,90+1,93	11,54+1,93	13,28+1,93	14,61+1,93	15,94+1,93	15,94+1,93	17,27+1,93
shear force level	**a≤ 135 mm**	≥ a_s [cm²] B500	1,45+2,01	2,18+4,02	2,90+4,02	3,28+4,02	3,65+4,02	4,01+4,02	4,40+4,02	5,13+4,02	5,90+4,02	6,49+4,02	7,08+4,02	7,08+4,02	7,67+4,02
V8±	**a= 260 mm**		3,26+2,01	4,89+4,02	6,53+4,02	7,38+4,02	8,20+4,02	9,02+4,02	9,90+4,02	11,54+4,02	13,28+4,02	14,61+4,02	15,94+4,02	15,94+4,02	17,27+4,02

MM-BH: minimum width of joist b_w 250 mm (concrete cover 30 mm)

item ⑤ - link reinforcement slabsides / element at direct support (all shear force level - a_s lapping reinforcement)														
offset balcony	**a≤ 135 mm**	≥ a_s [cm²] B500	1,25	1,87	2,50	2,82	3,14	3,45	3,78	4,41	5,08	5,58	6,09	6,09	6,60
offset balcony	**a= 260 mm**	≥ a_s [cm²] B500	2,81	4,21	5,62	6,35	7,06	7,76	8,51	9,93	11,42	12,56	13,70	13,70	14,84
item ⑥ - link reinforcement / element at indirect support (a_s lapping reinforcement + a_s transverse shear force)														
shear force level	**a≤ 135 mm**	≥ a_s [cm²] B500	1,25+0,48	1,87+0,96	2,50+0,96	2,82+0,96	3,14+0,96	3,45+0,96	3,78+0,96	4,41+0,96	5,08+0,96	5,58+0,96	6,09+0,96	6,09+0,96	6,60+0,96
VS / VS±	**a= 260 mm**		2,81+0,48	4,21+0,96	5,62+0,96	6,35+0,96	7,06+0,96	7,76+0,96	8,51+0,96	9,93+0,96	11,42+0,96	12,56+0,96	13,70+0,96	13,70+0,96	14,84+0,96
shear force level	**a≤ 135 mm**	≥ a_s [cm²] B500	1,25+0,86	1,87+1,72	2,50+1,72	2,82+1,72	3,14+1,72	3,45+1,72	3,78+1,72	4,41+1,72	5,08+1,72	5,58+1,72	6,09+1,72	6,09+1,72	6,60+1,72
V1 / V1±	**a= 260 mm**		2,81+0,86	4,21+1,72	5,62+1,72	6,35+1,72	7,06+1,72	7,76+1,72	8,51+1,72	9,93+1,72	11,42+1,72	12,56+1,72	13,70+1,72	13,70+1,72	14,84+1,72
shear force level	**a≤ 135 mm**	≥ a_s [cm²] B500	1,25+1,29	1,87+2,57	2,50+2,57	2,82+2,57	3,14+2,57	3,45+2,57	3,78+2,57	4,41+2,57	5,08+2,57	5,58+2,57	6,09+2,57	6,09+2,57	6,60+2,57
V2 / V2±	**a= 260 mm**		2,81+1,29	4,21+2,57	5,62+2,57	6,35+2,57	7,06+2,57	7,76+2,57	8,51+2,57	9,93+2,57	11,42+2,57	12,56+2,57	13,70+2,57	13,70+2,57	14,84+2,57
shear force level	**a≤ 135 mm**	≥ a_s [cm²] B500	1,25+1,72	1,87+3,43	2,50+3,43	2,82+3,43	3,14+3,43	3,45+3,43	3,78+3,43	4,41+3,43	5,08+3,43	5,58+3,43	6,09+3,43	6,09+3,43	6,60+3,43
V3 / V3±	**a= 260 mm**		2,81+1,72	4,21+3,43	5,62+3,43	6,35+3,43	7,06+3,43	7,76+3,43	8,51+3,43	9,93+3,43	11,42+3,43	12,56+3,43	13,70+3,43	13,70+3,43	14,84+3,43
shear force level	**a≤ 135 mm**	≥ a_s [cm²] B500	-	1,87+5,36	2,50+5,36	2,82+5,36	3,14+5,36	3,45+5,36	3,78+5,36	4,41+5,36	5,08+5,36	5,58+5,36	6,09+5,36	6,09+5,36	6,60+5,36
V4 / V4±	**a= 260 mm**		-	4,21+5,36	5,62+5,36	6,35+5,36	7,06+5,36	7,76+5,36	8,51+5,36	9,93+5,36	11,42+5,36	12,56+5,36	13,70+5,36	13,70+5,36	14,84+5,36
shear force level	**a≤ 135 mm**	≥ a_s [cm²] B500	1,25+0,48	1,87+0,96	2,50+0,96	2,82+0,96	3,14+0,96	3,45+0,96	3,78+0,96	4,41+0,96	5,08+0,96	5,58+0,96	6,09+0,96	6,09+0,96	6,60+0,96
V6±	**a= 260 mm**		2,81+0,48	4,21+0,96	5,62+0,96	6,35+0,96	7,06+0,96	7,76+0,96	8,51+0,96	9,93+0,96	11,42+0,96	12,56+0,96	13,70+0,96	13,70+0,96	14,84+0,96
shear force level	**a≤ 135 mm**	≥ a_s [cm²] B500	1,25+0,96	1,87+1,93	2,50+1,93	2,82+1,93	3,14+1,93	3,45+1,93	3,78+1,93	4,41+1,93	5,08+1,93	5,58+1,93	6,09+1,93	6,09+1,93	6,60+1,93
V7±	**a= 260 mm**		2,81+0,96	4,21+1,93	5,62+1,93	6,35+1,93	7,06+1,93	7,76+1,93	8,51+1,93	9,93+1,93	11,42+1,93	12,56+1,93	13,70+1,93	13,70+1,93	14,84+1,93
shear force level	**a≤ 135 mm**	≥ a_s [cm²] B500	1,25+2,01	1,87+4,02	2,50+4,02	2,82+4,02	3,14+4,02	3,45+4,02	3,78+4,02	4,41+4,02	5,08+4,02	5,58+4,02	6,09+4,02	6,09+4,02	6,60+4,02
V8±	**a= 260 mm**		2,81+2,01	4,21+4,02	5,62+4,02	6,35+4,02	7,06+4,02	7,76+4,02	8,51+4,02	9,93+4,02	11,42+4,02	12,56+4,02	13,70+4,02	13,70+4,02	14,84+4,02

item ③+④ - structural reinforcement
In the slab edge of the u-bar reinforcement is respectively to arrange ≥ ø8 (item ③).
On the balcony side, it is recommended to design the edge reinforcement for the shear force V_{Ed} / f_{yd} ≥ ø6/250 mm according to EN 1992 (item ④ - vs. item ②).

The dimension of the balcony offset BH [mm] must be specified in the element name, e.g. MM20-BHS120-C35-h200.

The suggested lapping reinforcement (α_6=1,5) is selected (item ①) to transfer 100% of the M_{Rd} of the Egcobox® (height Egcobox® = height floor). An other reinforcement selection is possible.
In case of an other reinforcement selection shall be approved the lapping reinforcement in accordance with EN 1992. The reinforcement cross section or the lapping length can be derated in reference of utilization proportional M_{Ed} / M_{Rd}.
The lapping reinforcement must be approved by the structural engineer.

The proposed steel cross-section a_s (item ②) covers the maximum design transverse force V_{Rd} of the Egcobox®. In case of smaller actions, the edge reinforcement may be determined with V_{Ed} / f_{yd} ≥ ø6/250 mm.

Item ⑤ or item ⑥ applies to the specified required minimum widths of the joist (b_w) and the height of the offset (***a*** ≤135 mm; ***a*** = 260 mm). For larger joist widths, a reduction of the required reinforcement is possible.
In between, interpolation can be performed. For larger joist widths, a reduction of the required reinforcement is possible.
When selecting the reinforcement, the reinforcement rules and the lap lengths must be taken into account. Ø6/250 mm is recommended as the minimum reinforcement.

Item ⑧ must be verified and planned by the structural engineer (corresponds to item ① for slab thickness = balcony slab thickness;
for slab thickness ≠ balcony slab thickness, an allowance is required or reduction is possible). The load transmission into the slab must be verified by the structural engineer.
The slab-side stirrups Item ⑦ are structurally recommended at 50 % of the main reinforcement Item ⑧ according to DAfStb Booklet 600.
For reinforcing frame corners, we recommend inclined reinforcement item ⑨ according to DAfStb Booklet 600 with AsS > 50% Pos. ⑧ or > 50% Pos. ⑤ or ⑥.

The specifications apply to good bonding conditions.

The specified connection reinforcement is required exclusively for the static transfer of the cutting forces from the cantilever slab connection.
The statically required beam-reinforcement is not taken into account and shown. This must be additionally dimensioned by the structural engineer.
The specified connection reinforcement is only a suggestion. The structural engineer in charge must check the feasibility of the design.
The distribution of the Egcobox® reinforcement and the required minimum beam widths must be observed.
In the case of alternating shear forces, the embedment length of the shear force bar must be taken into account when selecting the beam width.

design proposal

direct support

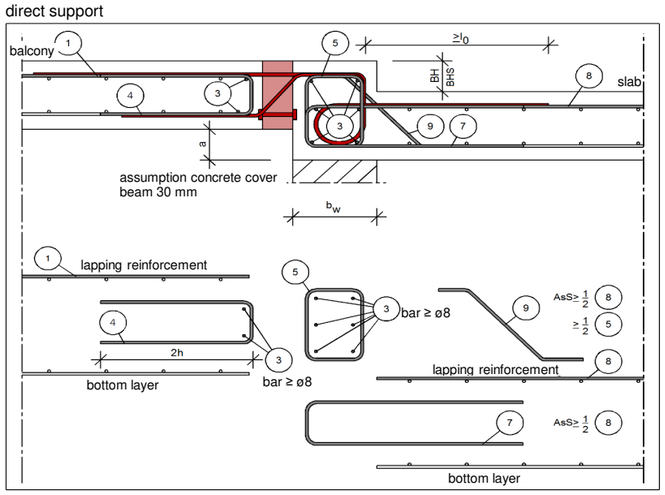

indirect support

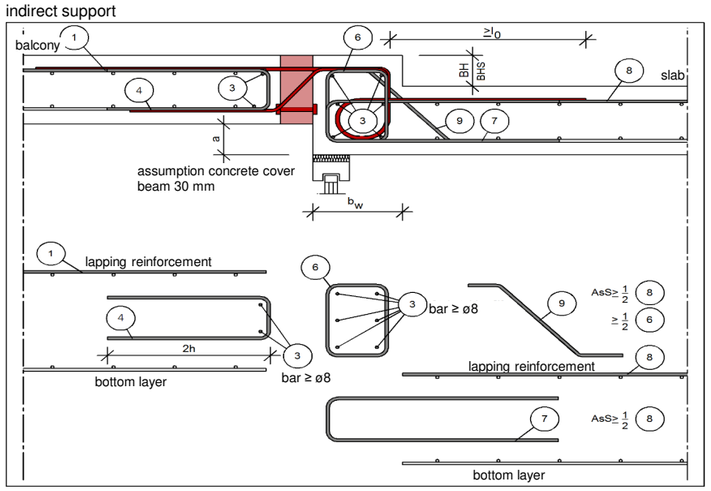

On-site reinforcement Egcobox® type MM-WU / WUS - C20/25

for balconies with overlap in wall downwards

Egcobox type WU / WUS	MM10-K	MM20	MM25	MM30	MM35	MM45	MM50	MM55	MM60	MM65	MM70	MM75	MM80
length of element [mm]	**500**	**1000**	**1000**	**1000**	**1000**	**1000**	**1000**	**1000**	**1000**	**1000**	**1000**	**1000**	**1000**
reqired minimum width of joist b_w [mm]	175	175	175	175	175	175	175	175	175	175	175	175	175
Egcobox ø rebar [mm]	ø 8	ø 8	ø 8	ø 8	ø 8	ø 8	ø 8	ø 8	ø 10	ø 10	ø 10	ø 10	ø 10
Egcobox l_0 rebar [mm]	475	475	475	475	475	475	475	475	612	612	612	612	612
item ① - lapping reinforcement / element													
≥ as [cm²] B500	2,43	3,64	4,86	5,46	6,07	6,68	7,28	8,50	9,77	10,75	11,73	11,73	12,71
suggested on-site reinforcement [mm]	ø 10	ø 10	ø 10	ø 10	ø 10	ø 10	ø 10	ø 10	ø 12	ø 12	ø 12	ø 12	ø 12
item ② - balcony-side suspension reinforcement shear force / element													
shear force level VS / VS± ≥ a_s [cm²] B500	-	1,12	1,12	1,12	1,12	1,12	1,12	1,12	1,12	1,12	1,12	1,12	1,12
shear force level V1 / V1± ≥ a_s [cm²] B500	-	1,72	1,72	1,72	1,72	1,72	1,72	1,72	1,72	1,72	1,72	1,72	1,72
shear force level V2 / V2± ≥ a_s [cm²] B500	-	2,57	2,57	2,57	2,57	2,57	2,57	2,57	2,57	2,57	2,57	2,57	2,57
shear force level V3 / V3± ≥ a_s [cm²] B500	-	3,43	3,43	3,43	3,43	3,43	3,43	3,43	3,43	3,43	3,43	3,43	3,43
shear force level V4 / V4± ≥ a_s [cm²] B500	-	5,36	5,36	5,36	5,36	5,36	5,36	5,36	5,36	5,36	5,36	5,36	5,36
shear force level V6± ≥ a_s [cm²] B500	0,56	1,12	1,12	1,12	1,12	1,12	1,12	1,12	1,12	1,12	1,12	1,12	1,12
shear force level V7± ≥ a_s [cm²] B500	0,96	1,93	1,93	1,93	1,93	1,93	1,93	1,93	1,93	1,93	1,93	1,93	1,93
shear force level V8± ≥ a_s [cm²] B500	2,01	4,02	4,02	4,02	4,02	4,02	4,02	4,02	4,02	4,02	4,02	4,02	4,02

MM-WUS: minimum width of joist b_w 175 mm (concrete cover 30 mm)

item ⑤ - link reinforcement in wall / element at <u>direct support</u> (all shear force level - a_s lapping reinforcement)														
connection	**h= 160 mm**	≥ a_s [cm²] B500	1,72	2,58	3,44	3,90	4,34	4,77	5,24	6,11	7,03	7,68	8,44	8,44	9,14
height	**h= 250 mm**	≥ a_s [cm²] B500	3,44	5,17	6,89	7,80	8,67	9,54	10,48	12,23	14,06	15,36	16,88	16,88	18,28

MM-WUS: minimum width of joist b_w 200 mm (concrete cover 30 mm)

item ⑤ - link reinforcement in wall / element at <u>direct support</u> (all shear force level - a_s lapping reinforcement)														
connection	**h= 160 mm**	≥ a_s [cm²] B500	1,46	2,19	2,92	3,31	3,68	4,05	4,44	5,18	5,96	6,52	7,15	7,15	7,75
height	**h= 250 mm**	≥ a_s [cm²] B500	2,92	4,39	5,85	6,62	7,36	8,09	8,88	10,36	11,92	13,03	14,30	14,30	15,50

MM-WU: minimum width of joist b_w 220 mm (concrete cover 30 mm)

item ⑤ - link reinforcement in wall / element at <u>direct support</u> (all shear force level - a_s lapping reinforcement)														
connection	**h= 160 mm**	≥ a_s [cm²] B500	1,31	1,96	2,61	2,95	3,28	3,61	3,96	4,62	5,31	5,81	6,37	6,37	6,91
height	**h= 250 mm**	≥ a_s [cm²] B500	2,61	3,92	5,22	5,91	6,56	7,22	7,92	9,24	10,62	11,62	12,75	12,75	13,81

MM-WU: minimum width of joist b_w 250 mm (concrete cover 30 mm)

item ⑤ - link reinforcement in wall / element at <u>direct support</u> (all shear force level - a_s lapping reinforcement)														
connection	**h= 160 mm**	≥ a_s [cm²] B500	1,12	1,69	2,25	2,54	2,82	3,11	3,40	3,97	4,57	5,00	5,48	5,48	5,94
height	**h= 250 mm**	≥ a_s [cm²] B500	2,25	3,37	4,50	5,08	5,65	6,21	6,81	7,94	9,14	10,00	10,96	10,96	11,88

item ③+④ - structural reinforcement

In the slab edge of the u-bar reinforcement is respectively to arrange ≥ ø8 (item ③).
On the balcony side, it is recommended to design the edge reinforcement for the shear force V_{Ed} / f_{yd} ≥ ø6/250 mm according to EN 1992 (item ④ - vs. item ②).

The suggested lapping reinforcement (α_6=1,5) is selected (item ①) to transfer 100% of the M_{Rd} of the Egcobox® (height Egcobox® = height floor). An other reinforcement selection is possible.
In case of an other reinforcement selection shall be approved the lapping reinforcement in accordance with EN 1992. The reinforcement cross section or the lapping length can be derated in reference of utilization proportional M_{Ed} / M_{Rd}.
The lapping reinforcement must be approved by the structural engineer.

The proposed steel cross-section a_s (item ②) covers the maximum design transverse force V_{Rd} of the Egcobox®. In case of smaller actions, the edge reinforcement may be determined with V_{Ed} / f_{yd} ≥ ø6/250 mm.

Item ⑤ applies to the specified required minimum widths of the wall (b_w) and the connection height (h) of the Egcobox.
In between, interpolation can be performed. For larger wall widths, a reduction of the required reinforcement is possible.
When selecting the reinforcement, the reinforcement rules and the lap lengths must be taken into account. Ø6/250 mm is recommended as the minimum reinforcement.

The specifications apply to good bonding conditions.

The specified connection reinforcement is required exclusively for the static transfer of the cutting forces from the cantilever slab connection.
The statically required beam-reinforcement is not taken into account and shown. This must be additionally dimensioned by the structural engineer.
The specified connection reinforcement is only a suggestion. The structural engineer in charge must check the feasibility of the design.
The distribution of the Egcobox® reinforcement and the required minimum wall widths must be observed.
In the case of alternating shear forces, the embedment length of the shear force bar must be taken into account when selecting the wall width.

design proposal

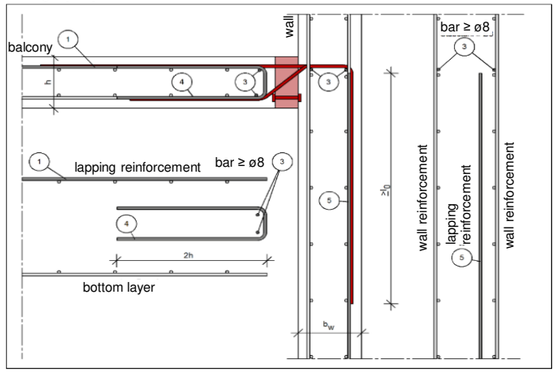

Design table Egcobox® type MM± - C20/25

for cantilever plates for transmission of positive and negative moments and shear forces, insulation 80 mm

	Egcobox type			MM20±	MM25±	MM30±	MM45±	MM50±	MM55±	MM60±	MM65±	MM70±	MM75±	MM80±	MM110±-K	MM120±-K	MM130±-K	MM150±-K
	length of element [mm]			1000	1000	1000	1000	1000	1000	1000	1000	1000	1000	1000	500	500	500	500
	concrete cover [mm]			M_{Rd} [kNm/element]														
	C30	C35	C50															
height of connection [mm] good bonding conditions		**160**	195	±14,1	±17,7	±21,2	±24,7	±28,3	±31,8	±35,3	±33,0	±37,7	±42,4	±47,1	±28,3	±31,5	±34,0	±48,3
	160	165	**200**	±15,0	±18,7	±22,5	±26,2	±30,0	±33,7	±37,4	±35,0	±40,0	±45,0	±50,0	±30,0	±33,4	±36,1	±51,4
	165	170	205	±15,8	±19,8	±23,7	±27,7	±31,7	±35,6	±39,6	±37,0	±42,3	±47,6	±52,9	±31,7	±35,4	±38,2	±54,5
	170	175	210	±16,7	±20,8	±25,0	±29,2	±33,4	±37,5	±41,7	±39,1	±44,6	±50,2	±55,8	±33,5	±37,3	±40,3	±57,5
	175	**180**	215	±17,5	±21,9	±26,3	±30,7	±35,1	±39,4	±43,8	±41,1	±47,0	±52,8	±58,7	±35,2	±39,3	±42,4	±60,6
	180	185	**220**	±18,4	±23,0	±27,6	±32,2	±36,8	±41,4	±46,0	±43,1	±49,3	±55,5	±61,6	±37,0	±41,2	±44,5	±63,6
	185	190	225	±19,2	±24,0	±28,8	±33,7	±38,5	±43,3	±48,1	±45,2	±51,6	±58,1	±64,5	±38,7	±43,2	±46,6	±66,7
	190	195	230	±20,1	±25,1	±30,1	±35,1	±40,2	±45,2	±50,2	±47,2	±54,0	±60,7	±67,4	±40,5	±45,1	±48,7	±69,8
	195	**200**	235	±20,9	±26,2	±31,4	±36,6	±41,9	±47,1	±52,3	±49,2	±56,3	±63,3	±70,3	±42,2	±47,0	±50,8	±72,8
	200	205	**240**	±21,8	±27,2	±32,7	±38,1	±43,6	±49,0	±54,5	±51,3	±58,6	±65,9	±73,3	±44,0	±49,0	±52,9	±75,9
	205	210	245	±22,6	±28,3	±34,0	±39,6	±45,3	±50,9	±56,6	±53,3	±60,9	±68,5	±76,2	±45,7	±50,9	±55,0	±78,9
	210	215	250	±23,5	±29,4	±35,2	±41,1	±47,0	±52,8	±58,7	±55,3	±63,3	±71,2	±79,1	±47,4	±52,9	±57,1	±82,0
	215	**220**	255	±24,3	±30,4	±36,5	±42,6	±48,7	±54,8	±60,8	±57,4	±65,6	±73,8	±82,0	±49,2	±54,8	±59,2	±85,1
	220	225	**260**	±25,2	±31,5	±37,8	±44,1	±50,4	±56,7	±63,0	±59,4	±67,9	±76,4	±84,9	±50,9	±56,8	±61,3	±88,1
	225	230	265	±26,0	±32,5	±39,1	±45,6	±52,1	±58,6	±65,1	±61,5	±70,2	±79,0	±87,8	±52,7	±58,7	±63,4	±91,2
	230	235	270	±26,9	±33,6	±40,3	±47,1	±53,8	±60,5	±67,2	±63,5	±72,6	±81,6	±90,7	±54,4	±60,7	±65,5	±94,2
	235	**240**	275	±27,7	±34,7	±41,6	±48,5	±55,5	±62,4	±69,4	±65,5	±74,9	±84,2	±93,6	±56,2	±62,6	±67,6	±97,3
	240	245	**280**	±28,6	±35,7	±42,9	±50,0	±57,2	±64,3	±71,5	±67,6	±77,2	±86,9	±96,5	±57,9	±64,5	±69,7	±100,4
	245	250	285	±29,4	±36,8	±44,2	±51,5	±58,9	±66,2	±73,6	±69,6	±79,5	±89,5	±99,4	±59,6	±66,5	±71,8	±103,4
	250	255	290	±30,3	±37,9	±45,4	±53,0	±60,6	±68,2	±75,7	±71,6	±81,9	±92,1	±102,3	±61,4	±68,4	±73,9	±106,5
	255	**260**	295	±31,1	±38,9	±46,7	±54,5	±62,3	±70,1	±77,9	±73,7	±84,2	±94,7	±105,2	±63,1	±70,4	±76,0	±109,5
	260	265	**300**	±32,0	±40,0	±48,0	±56,0	±64,0	±72,0	±80,0	±75,7	±86,5	±97,3	±108,1	±64,9	±72,3	±78,1	±112,6
	265	270		±32,8	±41,1	±49,3	±57,5	±65,7	±73,9	±82,1	±77,7	±88,8	±99,9	±111,0	±66,6	±74,3	±80,2	±115,7
	270	275		±33,7	±42,1	±50,5	±59,0	±67,4	±75,8	±84,2	±79,8	±91,2	±102,6	±113,9	±68,4	±76,2	±82,3	±118,7
	275	**280**		±34,5	±43,2	±51,8	±60,5	±69,1	±77,7	±86,4	±81,8	±93,5	±105,2	±116,9	±70,1	±78,2	±84,4	±121,8
	280	285		±35,4	±44,2	±53,1	±61,9	±70,8	±79,6	±88,5	±83,8	±95,8	±107,8	±119,8	±71,9	±80,1	±86,5	±124,8
	285	290		±36,3	±45,3	±54,4	±63,4	±72,5	±81,6	±90,6	±85,9	±98,1	±110,4	±122,7	±73,6	±82,0	±88,6	±127,9
	290	295		±37,1	±46,4	±55,7	±64,9	±74,2	±83,5	±92,8	±87,9	±100,5	±113,0	±125,6	±75,3	±84,0	±90,7	±131,0
	295	**300**		±38,0	±47,4	±56,9	±66,4	±75,9	±85,4	±94,9	±89,9	±102,8	±115,6	±128,5	±77,1	±85,9	±92,8	±134,0
	300			±38,8	±48,5	±58,2	±67,9	±77,6	±87,3	±97,0	±92,0	±105,1	±118,3	±131,4	±78,8	±87,9	±94,9	±137,1

Shear force level		concrete cover [mm]			V_{Rd} [kN/element]														
		C30	C35	C50															
height of connection [mm] good bonding conditions	VS	160-190	160-195	195-230	±41,9	±41,9	±41,9	±41,9	±41,9	±41,9	±41,9	±41,9	±41,9	±41,9	±41,9	±41,9	±41,9	±41,9	±41,9
		195-300	200-300	235-300	±41,9	±41,9	±41,9	±41,9	±41,9	±41,9	±41,9	±41,9	±41,9	±41,9	±41,9	±41,9	±41,9	±41,9	±41,9
	V1	160-190	160-195	195-230	±74,6	±74,6	±74,6	±74,6	±74,6	±74,6	±74,6	±74,6	±74,6	±74,6	±74,6	±74,6	±74,6	±74,6	±74,6
		195-300	200-300	235-300	±74,6	±74,6	±74,6	±74,6	±74,6	±74,6	±74,6	±74,6	±74,6	±74,6	±74,6	±74,6	±74,6	±74,6	±74,6
	V2	160-190	160-195	195-230	±111,9	±111,9	±111,9	±111,9	±111,9	±111,9	±111,9	±111,9	±111,9	±111,9	±111,9	±111,9	±111,9	±111,9	±111,9
		195-300	200-300	235-300	±111,9	±111,9	±111,9	±111,9	±111,9	±111,9	±111,9	±111,9	±111,9	±111,9	±111,9	±111,9	±111,9	±111,9	±111,9
	V3	160-190	160-195	195-230	±149,2	±149,2	±149,2	±149,2	±149,2	±149,2	±149,2	±149,2	±149,2	±149,2	±149,2	-	-	-	-
		195-300	200-300	235-300	±149,2	±149,2	±149,2	±149,2	±149,2	±149,2	±149,2	±149,2	±149,2	±149,2	±149,2	-	-	-	-
	V4	175-190	180-195	195-210	-	-	±174,8	±174,8	±174,8	±174,8	±174,8	±174,8	±174,8	±174,8	±174,8	-	-	-	-
		195-300	200-300	215-300	-	-	±174,8	±174,8	±174,8	±174,8	±174,8	±174,8	±174,8	±174,8	±174,8	-	-	-	-
	V5	175-190	180-195	195-210	-	-	-	-	±233,1	±233,1	±233,1	±233,1	±233,1	±233,1	±233,1	-	-	-	-
		195-300	200-300	215-300	-	-	-	-	±233,1	±233,1	±233,1	±233,1	±233,1	±233,1	±233,1	-	-	-	-

concrete cover:

C30: c_o = 30 mm, c_u = 30 mm

C35: c_o = 35 mm, c_u = 30 mm

C50: c_o = 50 mm, c_u = 50 mm

Reinforcement Egcobox® type MM±

Egcobox type	MM20±	MM25±	MM30±	MM45±	MM50±	MM55±	MM60±	MM65±	MM70±	MM75±	MM80±	MM110±-K	MM120±-K	MM130±-K	MM150±-K
length of element [mm]	**1000**	**1000**	**1000**	**1000**	**1000**	**1000**	**1000**	**1000**	**1000**	**1000**	**1000**	**500**	**500**	**500**	**500**
tensile bars	4 ø 12	5 ø 12	6 ø 12	7 ø 12	8 ø 12	9 ø 12	10 ø 12	7 ø 14	8 ø 14	9 ø 14	10 ø 14	6 ø 14	7 ø 14	8 ø 14	7 ø 16
length of tensile bars [mm]	1300	1300	1300	1300	1300	1300	1300	1580	1580	1580	1580	1580	1580	1580	2520
compression bars	4 ø 12	5 ø 12	6 ø 12	7 ø 12	8 ø 12	9 ø 12	10 ø 12	7 ø 14	8 ø 14	9 ø 14	10 ø 14	6 ø 14	7 ø 14	8 ø 14	7 ø 16
length of compression bars [mm]	1300	1300	1300	1300	1300	1300	1300	1580	1580	1580	1580	1580	1580	1580	2520
shear force bars VS	2x 4 ø 6	2x 4 ø 6	2x 4 ø 6	2x 4 ø 6	2x 4 ø 6	2x 4 ø 6	2x 4 ø 6	2x 4 ø 6	2x 4 ø 6	2x 4 ø 6	2x 4 ø 6	2x 4 ø 6	2x 4 ø 6	2x 4 ø 6	2x 4 ø 6
shear force bars V1	2x 4 ø 8	2x 4 ø 8	2x 4 ø 8	2x 4 ø 8	2x 4 ø 8	2x 4 ø 8	2x 4 ø 8	2x 4 ø 8	2x 4 ø 8	2x 4 ø 8	2x 4 ø 8	2x 4 ø 8	2x 4 ø 8	2x 4 ø 8	2x 4 ø 8
shear force bars V2	2x 6 ø 8	2x 6 ø 8	2x 6 ø 8	2x 6 ø 8	2x 6 ø 8	2x 6 ø 8	2x 6 ø 8	2x 6 ø 8	2x 6 ø 8	2x 6 ø 8	2x 6 ø 8	2x 6 ø 8	2x 6 ø 8	2x 6 ø 8	2x 6 ø 8
shear force bars V3	2x 8 ø 8	2x 8 ø 8	2x 8 ø 8	2x 8 ø 8	2x 8 ø 8	2x 8 ø 8	2x 8 ø 8	2x 8 ø 8	2x 8 ø 8	2x 8 ø 8	2x 8 ø 8	-	-	-	-
shear force bars V4	-	-	2x 6 ø 10	2x 6 ø 10	2x 6 ø 10	2x 6 ø 10	2x 6 ø 10	2x 6 ø 10	2x 6 ø 10	2x 6 ø 10	2x 6 ø 10	-	-	-	-
shear force bars V5	-	-	-	-	2x 8 ø 10	2x 8 ø 10	2x 8 ø 10	2x 8 ø 10	2x 8 ø 10	2x 8 ø 10	2x 8 ø 10	-	-	-	-
applicable expansion joint distances [m]	**13,5**	**13,5**	**13,5**	**13,5**	**13,5**	**13,5**	**13,5**	**11,7**	**11,7**	**11,7**	**11,7**	**11,7**	**11,7**	**11,7**	**10,1**

concrete cover:

C30: c_o = 30 mm, c_u = 30 mm

C35: c_o = 35 mm, c_u = 30 mm

C50: c_o = 50 mm, c_u = 50 mm

Torsion of the slab in the area of the insulation joint - Egcobox® type MM±

	Egcobox type			MM20±	MM25±	MM30±	MM45±	MM50±	MM55±	MM60±	MM65±	MM70±	MM75±	MM80±	MM110±-K	MM120±-K	MM130±-K	MM150±-K
	length of element [mm]			**1000**	**1000**	**1000**	**1000**	**1000**	**1000**	**1000**	**1000**	**1000**	**1000**	**1000**	**500**	**500**	**500**	**500**
	concrete cover [mm]			**banking factor k [1/kNm]**														
	C30	**C35**	**C50**															
height of connection [mm] good bonding conditions		**160**	195	1,617	1,294	1,078	0,924	0,809	0,719	0,647	0,674	0,590	0,524	0,472	0,786	0,674	0,590	0,520
	160	165	**200**	1,439	1,151	0,959	0,822	0,719	0,639	0,575	0,598	0,523	0,465	0,418	0,697	0,598	0,523	0,460
	165	170	205	1,288	1,030	0,859	0,736	0,644	0,572	0,515	0,534	0,467	0,415	0,374	0,623	0,534	0,467	0,410
	170	175	210	1,160	0,928	0,773	0,663	0,580	0,516	0,464	0,480	0,420	0,373	0,336	0,560	0,480	0,420	0,368
	175	**180**	215	1,050	0,840	0,700	0,600	0,525	0,467	0,420	0,433	0,379	0,337	0,303	0,506	0,433	0,379	0,331
	180	185	**220**	0,955	0,764	0,637	0,546	0,478	0,425	0,382	0,393	0,344	0,306	0,275	0,459	0,393	0,344	0,300
	185	190	225	0,872	0,698	0,582	0,499	0,436	0,388	0,349	0,359	0,314	0,279	0,251	0,419	0,359	0,314	0,273
	190	195	230	0,800	0,640	0,533	0,457	0,400	0,356	0,320	0,329	0,287	0,256	0,230	0,383	0,329	0,287	0,250
	195	**200**	235	0,736	0,589	0,491	0,421	0,368	0,327	0,295	0,302	0,264	0,235	0,211	0,352	0,302	0,264	0,229
	200	205	**240**	0,680	0,544	0,453	0,389	0,340	0,302	0,272	0,278	0,244	0,217	0,195	0,325	0,278	0,244	0,211
	205	210	245	0,630	0,504	0,420	0,360	0,315	0,280	0,252	0,258	0,225	0,200	0,180	0,301	0,258	0,225	0,195
	210	215	250	0,585	0,468	0,390	0,334	0,293	0,260	0,234	0,239	0,209	0,186	0,167	0,279	0,239	0,209	0,181
	215	**220**	255	0,545	0,436	0,363	0,311	0,272	0,242	0,218	0,222	0,195	0,173	0,156	0,259	0,222	0,195	0,168
	220	225	**260**	0,509	0,407	0,339	0,291	0,254	0,226	0,203	0,207	0,181	0,161	0,145	0,242	0,207	0,181	0,157
	225	230	265	0,476	0,381	0,317	0,272	0,238	0,212	0,190	0,194	0,170	0,151	0,136	0,226	0,194	0,170	0,146
	230	235	270	0,446	0,357	0,298	0,255	0,223	0,198	0,179	0,182	0,159	0,141	0,127	0,212	0,182	0,159	0,137
	235	**240**	275	0,419	0,335	0,280	0,240	0,210	0,186	0,168	0,171	0,149	0,133	0,119	0,199	0,171	0,149	0,128
	240	245	**280**	0,395	0,316	0,263	0,226	0,197	0,175	0,158	0,160	0,140	0,125	0,112	0,187	0,160	0,140	0,121
	245	250	285	0,372	0,298	0,248	0,213	0,186	0,165	0,149	0,151	0,132	0,118	0,106	0,176	0,151	0,132	0,114
	250	255	290	0,352	0,281	0,234	0,201	0,176	0,156	0,141	0,143	0,125	0,111	0,100	0,167	0,143	0,125	0,107
	255	**260**	295	0,333	0,266	0,222	0,190	0,166	0,148	0,133	0,135	0,118	0,105	0,094	0,157	0,135	0,118	0,101
	260	265	**300**	0,315	0,252	0,210	0,180	0,158	0,140	0,126	0,128	0,112	0,099	0,089	0,149	0,128	0,112	0,096
	265	270		0,299	0,239	0,199	0,171	0,150	0,133	0,120	0,121	0,106	0,094	0,085	0,141	0,121	0,106	0,091
	270	275		0,284	0,227	0,189	0,162	0,142	0,126	0,114	0,115	0,101	0,090	0,081	0,134	0,115	0,101	0,086
	275	**280**		0,270	0,216	0,180	0,154	0,135	0,120	0,108	0,109	0,096	0,085	0,077	0,128	0,109	0,096	0,082
	280	285		0,258	0,206	0,172	0,147	0,129	0,114	0,103	0,104	0,091	0,081	0,073	0,122	0,104	0,091	0,078
	285	290		0,246	0,196	0,164	0,140	0,123	0,109	0,098	0,099	0,087	0,077	0,070	0,116	0,099	0,087	0,074
	290	295		0,234	0,188	0,156	0,134	0,117	0,104	0,094	0,095	0,083	0,074	0,066	0,111	0,095	0,083	0,071
	295	**300**		0,224	0,179	0,149	0,128	0,112	0,100	0,090	0,091	0,079	0,070	0,063	0,106	0,091	0,079	0,068
	300			0,214	0,171	0,143	0,122	0,107	0,095	0,086	0,087	0,076	0,067	0,061	0,101	0,087	0,076	0,065

Rotation spring stiffness Egcobox® type MM±

	Egcobox type			MM20±	MM25±	MM30±	MM45±	MM50±	MM55±	MM60±	MM65±	MM70±	MM75±	MM80±	MM110±-K	MM120±-K	MM130±-K	MM150±-K
	length of element [mm]			1000	1000	1000	1000	1000	1000	1000	1000	1000	1000	1000	500	500	500	500
	concrete cover [mm]			Rotation spring stiffness [kNm/rad/Element]														
	C30	C35	C50															
height of connection [mm] good bonding conditions		**160**	195	618	773	928	1082	1237	1391	1546	1484	1696	1908	2120	1272	1484	1696	1921
	160	165	**200**	695	869	1043	1216	1390	1564	1738	1673	1912	2151	2390	1434	1673	1912	2172
	165	170	205	776	970	1164	1359	1553	1747	1941	1873	2141	2408	2676	1606	1873	2141	2439
	170	175	210	862	1078	1293	1509	1724	1940	2155	2085	2382	2680	2978	1787	2085	2382	2720
	175	**180**	215	952	1190	1428	1666	1905	2143	2381	2307	2637	2967	3296	1978	2307	2637	3017
	180	185	**220**	1047	1309	1570	1832	2094	2356	2617	2542	2905	3268	3631	2178	2542	2905	3330
	185	190	225	1146	1433	1719	2006	2292	2579	2865	2787	3185	3583	3981	2389	2787	3185	3658
	190	195	230	1250	1562	1875	2187	2500	2812	3125	3044	3478	3913	4348	2609	3044	3478	4001
	195	**200**	235	1358	1697	2037	2376	2716	3055	3395	3312	3785	4258	4731	2839	3312	3785	4360
	200	205	**240**	1471	1838	2206	2574	2941	3309	3677	3591	4104	4617	5130	3078	3591	4104	4734
	205	210	245	1588	1985	2382	2779	3176	3572	3969	3882	4436	4991	5545	3327	3882	4436	5123
	210	215	250	1709	2137	2564	2991	3419	3846	4273	4184	4781	5379	5977	3586	4184	4781	5528
	215	**220**	255	1835	2294	2753	3212	3671	4130	4589	4497	5139	5782	6424	3855	4497	5139	5948
	220	225	**260**	1966	2458	2949	3441	3932	4424	4915	4822	5510	6199	6888	4133	4822	5510	6384
	225	230	265	2101	2626	3152	3677	4202	4728	5253	5157	5894	6631	7368	4421	5157	5894	6835
	230	235	270	2241	2801	3361	3921	4482	5042	5602	5505	6291	7077	7864	4718	5505	6291	7302
	235	**240**	275	2385	2981	3577	4173	4770	5366	5962	5863	6701	7538	8376	5026	5863	6701	7783
	240	245	**280**	2533	3167	3800	4433	5067	5700	6333	6233	7123	8014	8904	5343	6233	7123	8281
	245	250	285	2686	3358	4030	4701	5373	6044	6716	6614	7559	8504	9449	5669	6614	7559	8793
	250	255	290	2844	3555	4266	4977	5688	6399	7110	7007	8008	9008	10009	6006	7007	8008	9321
	255	**260**	295	3006	3757	4509	5260	6012	6763	7515	7410	8469	9528	10586	6352	7410	8469	9865
	260	265	**300**	3172	3966	4759	5552	6345	7138	7931	7825	8943	10061	11179	6708	7825	8943	10423
	265	270		3343	4179	5015	5851	6687	7523	8359	8252	9431	10609	11788	7073	8252	9431	10998
	270	275		3519	4399	5278	6158	7038	7918	8797	8689	9931	11172	12414	7448	8689	9931	11587
	275	**280**		3699	4624	5548	6473	7398	8323	9247	9138	10444	11749	13055	7833	9138	10444	12192
	280	285		3883	4854	5825	6796	7767	8738	9708	9599	10970	12341	13713	8228	9599	10970	12813
	285	290		4072	5090	6108	7127	8145	9163	10181	10070	11509	12948	14386	8632	10070	11509	13448
	290	295		4266	5332	6399	7465	8531	9598	10664	10553	12061	13569	15076	9046	10553	12061	14099
	295	**300**		4464	5580	6695	7811	8927	10043	11159	11048	12626	14204	15782	9469	11048	12626	14766
	300			4666	5833	6999	8166	9332	10499	11665	11553	13204	14854	16504	9903	11553	13204	15448

On-site reinforcement Egcobox® type MM± - C20/25

Egcobox type	MM20±	MM25±	MM30±	MM45±	MM50±	MM55±	MM60±	MM65±	MM70±	MM75±	MM80±	MM110±-K	MM120±-K	MM130±-K	MM150±-K
length of element [mm]	**1000**	**1000**	**1000**	**1000**	**1000**	**1000**	**1000**	**1000**	**1000**	**1000**	**1000**	**500**	**500**	**500**	**500**
Egcobox ø rebar [mm]	ø 12	ø 12	ø 12	ø 12	ø 12	ø 12	ø 12	ø 14	ø 14	ø 14	ø 14	ø 14	ø 14	ø 14	ø 16
Egcobox l_0 rebar [mm]	580	580	580	580	580	580	580	720	720	720	720	720	720	720	1190
item ① - lapping reinforcement / element															
≥ a_s [cm²] B500	3,91	4,89	5,87	6,85	7,83	8,81	9,79	9,36	10,70	12,03	13,37	8,02	8,94	9,66	14,07
suggested on-site reinforcement [mm]	ø 12	ø 12	ø 12	ø 12	ø 12	ø 12	ø 12	ø 14	ø 14	ø 14	ø 14	ø 14	ø 14	ø 14	ø 16
item ② - suspension reinforcement shear force / element															
shear force level VS ≥ a_s [cm²] B500	1,12	1,12	1,12	1,12	1,12	1,12	1,12	1,12	1,12	1,12	1,12	0,96	0,96	0,96	0,96
shear force level V1 ≥ a_s [cm²] B500	1,72	1,72	1,72	1,72	1,72	1,72	1,72	1,72	1,72	1,72	1,72	1,72	1,72	1,72	1,72
shear force level V2 ≥ a_s [cm²] B500	2,57	2,57	2,57	2,57	2,57	2,57	2,57	2,57	2,57	2,57	2,57	2,57	2,57	2,57	2,57
shear force level V3 ≥ a_s [cm²] B500	3,43	3,43	3,43	3,43	3,43	3,43	3,43	3,43	3,43	3,43	3,43	-	-	-	-
shear force level V4 ≥ a_s [cm²] B500	-	-	4,02	4,02	4,02	4,02	4,02	4,02	4,02	4,02	4,02	-	-	-	-
shear force level V5 ≥ a_s [cm²] B500	-	-	-	-	5,36	5,36	5,36	5,36	5,36	5,36	5,36	-	-	-	-

item ③+④ - structural reinforcement
In the slab edge of the u-bar reinforcement is respectively to arrange ≥ ø8 (item ③).
On the balcony side, it is recommended to design the edge reinforcement for the shear force V_{Ed} / f_{yd} ≥ ø6/250 mm according to EN 1992 (item ④ - vs. item ②).

Depending on the moment load (negative or positive moment), the overlap of the bending tension reinforcement (item ①) can only be sufficient in the top or lower layer.
The suggested lapping reinforcement (α_6=1,5) is selected (item ①) to transfer 100% of the M_{Rd} of the Egcobox® (height Egcobox® = height floor). An other reinforcement selection is possible.
In case of an other reinforcement selection shall be approved the lapping reinforcement in accordance with EN 1992. The reinforcement cross section or the lapping length can be derated in reference of utilization proportional M_{Ed} / M_{Rd}.
The lapping reinforcement must be approved by the structural engineer.

The proposed steel cross-section a_s (item ②) covers the maximum design transverse force V_{Rd} of the Egcobox®. In case of smaller actions, the edge reinforcement may be determined with V_{Ed} / f_{yd} ≥ ø6/250 mm.

The specifications apply to good bonding conditions.

design proposal

direct support

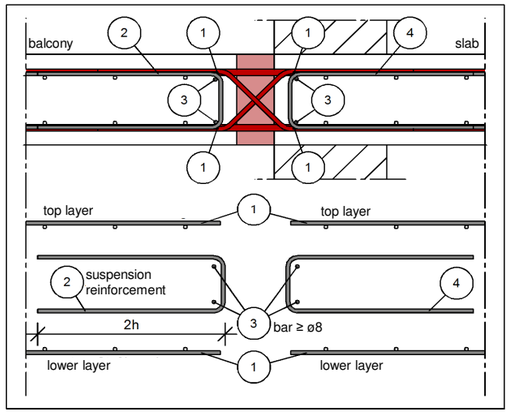

indirect support

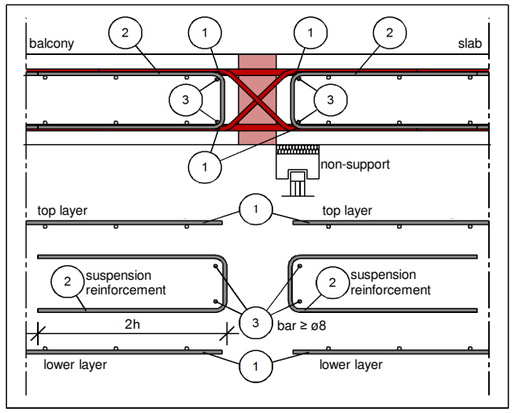

Design table Egcobox® type VM - C20/25

for supported plates for the transmission of shear forces, insulation 80 mm

Egcobox type			VM48	VM61	VM86	VM108	VM130	VM173	VM216	VM259	VM333	VM399
length of element [mm]			**1000**	**1000**	**1000**	**1000**	**1000**	**1000**	**1000**	**1000**	**1000**	**1000**
concrete cover [mm]												
C30	**C35**	**C50**					**V_{Rd} [kN/element]**					
height of connection [mm] good bonding conditions												
160-170	160-175	175-190	41,9	52,4	74,6	93,2	111,9	149,2	-	-	-	-
175-190	180-195	195-210							186,4	223,7	-	-
195-300	200-300	215-300	41,9	52,4	74,6	93,2	111,9	149,2	186,4	223,7	291,3	349,6

Reinforcement										
shear force bars	4 ø 6	5 ø 6	4 ø 8	5 ø 8	6 ø 8	8 ø 8	10 ø 8	12 ø 8	10 ø 10	12 ø 10
minimum wall / beam width [mm]	180	180	200	200	200	200	200	200	220	220
compression bearings	4 ø 12	4 ø 12	4 ø 12	4 ø 12	4 ø 12	4 ø 12	4 ø 12	4 ø 12	5 ø 12	6 ø 12
applicable expansion joint distances [m]	**11,7**	**11,7**	**11,7**	**11,7**	**11,7**	**11,7**	**11,7**	**11,7**	**11,7**	**11,7**

Design table Egcobox® type VM-K - C20/25

for supported plates for the transmission of shear forces, insulation 80 mm

Egcobox type			VM24-K	VM43-K	VM65-K	VM86-K	VM108-K	VM130-K	VM151-K	VM200-K
length of element [mm]			**200**	**250**	**250**	**300**	**400**	**400**	**500**	**500**
concrete cover [mm]										
C30	**C35**	**C50**					**V_{Rd} [kN/element]**			
height of connection [mm] good bonding conditions										
160-170	160-175	175-190	21,0	37,3	55,9	74,6	93,2	-	130,5	-
175-190	180-195	195-210						116,5		174,8
195-300	200-300	215-300	21,0	37,3	55,9	74,6	93,2	116,5	130,5	174,8

Reinforcement								
shear force bars	2 ø 6	2 ø 8	3 ø 8	4 ø 8	5 ø 8	4 ø 10	7 ø 8	6 ø 10
minimum wall / beam width [mm]	180	200	200	200	200	220	200	220
compression bearings	1 ø 12	1 ø 12	1 ø 12	2 ø 12	2 ø 12	2 ø 12	3 ø 12	3 ø 12
applicable expansion joint distances [m]	**11,7**	**11,7**	**11,7**	**11,7**	**11,7**	**11,7**	**11,7**	**11,7**

On-site reinforcement Egcobox® type VM / VM-K - C20/25

Egcobox type	VM48	VM61	VM86	VM108	VM130	VM173	VM216	VM259	VM333	VM399
length of element [mm]	**1000**	**1000**	**1000**	**1000**	**1000**	**1000**	**1000**	**1000**	**1000**	**1000**
item ② - suspension reinforcement side shear force / element										
≥ a_s [cm²] B500	1,12	1,21	1,72	2,14	2,57	3,43	4,29	5,15	6,70	8,04
x = shear force bar embedment depth (slab) [mm]	155	155	175	175	175	175	175	175	195	195

Egcobox type	VM24-K	VM43-K	VM65-K	VM86-K	VM108-K	VM130-K	VM151-K	VM200-K
length of element [mm]	**200**	**250**	**250**	**300**	**400**	**400**	**500**	**500**
item ② - suspension reinforcement side shear force / element								
≥ a_s [cm²] B500	0,48	0,86	1,29	1,72	2,14	2,68	3,00	4,02
x = shear force bar embedment depth (slab) [mm]	155	175	175	175	175	195	175	195

item ③+④+⑤ - structural reinforcement
In the slab edge of the u-bar reinforcement is respectively to arrange ≥ ø8 (item ③).
On the balcony side, it is recommended to design the edge reinforcement for the shear force V_{Ed} / f_{yd} ≥ ø6/250 mm according to EN 1992 (item ④ - vs. item ②); on the floor side, an edge beam (item ⑤) ≥ ø6/250 is to be provided.

The proposed steel cross-section a_s The proposed steel cross-section as covers the maximum design transverse force V_{Rd} of the Egcobox®. In case of smaller actions, the edge reinforcement may be determined with V_{Ed} / f_{yd} ≥ ø6/250 mm.

The specifications apply to good bonding conditions.

design proposal

direct support

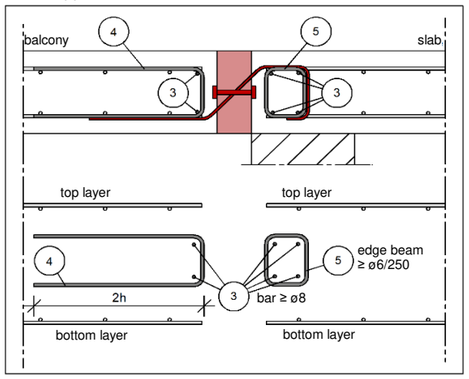

direct support (semi-prefab slab)

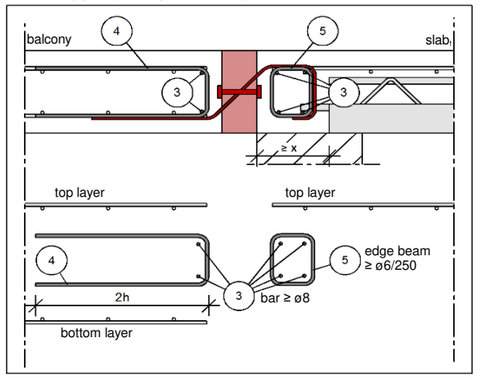

direct support: Egcobox in semi-prefab balcony

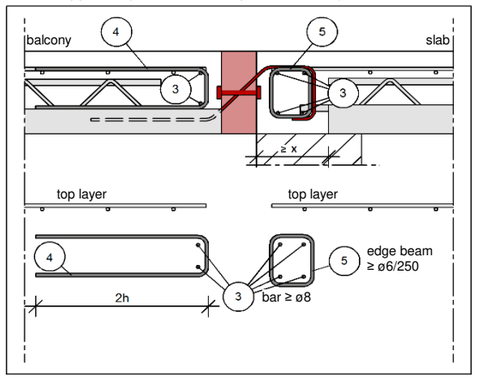

indirect support

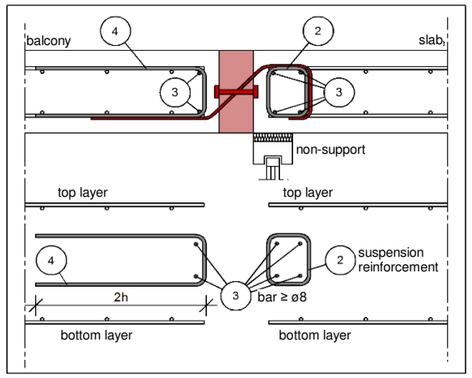

indirect support (semi-prefab slab)

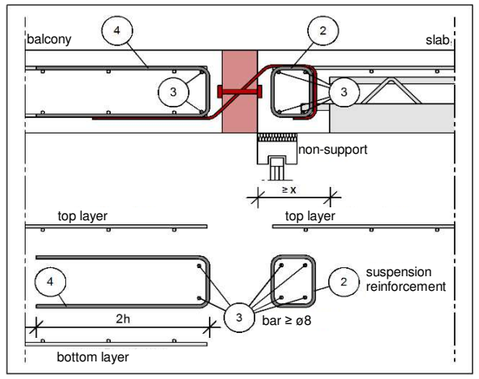

Note Egcobox in semi-prefab balcony:
It is advisable to include the constructive edging on the balcony side (item ④ vs. item ②) in the semi-prefab part.

Note indirect support (semi-prefab slab):
The information on the minimum required connection reinforcement of the Egcobox of the ceiling-side item ② does not replace the statically selected beam reinforcement of the structural engineer. This has to be considered additionally. The Pos ③ on the ceiling side, however, is only constructive and can be taken into account for the static specifications of the structural engineer.

Design table Egcobox® type VM± - C20/25

for supported plates for transmission of positive and negative shear forces, insulation 80 mm

Egcobox type			VM48±	VM61±	VM86±	VM108±	VM130±	VM173±	VM216±	VM259±	VM333±	VM399±
length of element [mm]			1000	1000	1000	1000	1000	1000	1000	1000	1000	1000
concrete cover [mm]			V_{Rd} [kN/element]									
C30	C35	C50										
height of connection [mm] good bonding conditions												
160-170	160-175	175-190	±41,9	±52,4	±74,6	±93,2	±111,9	±149,2	-	-	-	-
175-190	180-195	195-210							±186,4	±223,7	-	-
195-300	200-300	215-300	±41,9	±52,4	±74,6	±93,2	±111,9	±149,2	±186,4	±223,7	±291,3	±349,6

Reinforcement										
shear force bars	2x 4 ø 6	2x 5 ø 6	2x 4 ø 8	2x 5 ø 8	2x 6 ø 8	2x 8 ø 8	2x 10 ø 8	2x 12 ø 8	2x 10 ø 10	2x 12 ø 10
minimum wall / beam width [mm]	180	180	200	200	200	200	200	200	220	220
compression bearings	4 ø 12	4 ø 12	4 ø 12	4 ø 12	4 ø 12	4 ø 12	4 ø 12	4 ø 12	5 ø 12	6 ø 12
applicable expansion joint distances [m]	**11,7**	**11,7**	**11,7**	**11,7**	**11,7**	**11,7**	**11,7**	**11,7**	**11,7**	**11,7**

Design table Egcobox® type VM-K± - C20/25

for supported plates for transmission of positive and negative shear forces, insulation 80 mm

Egcobox type			VM24-K±	VM43-K±	VM65-K±	VM86-K±	VM108-K±	VM130-K±	VM151-K±	VM200-K±
length of element [mm]			200	250	250	310	400	400	500	520
concrete cover [mm]			V_{Rd} [kN/element]							
C30	C35	C50								
height of connection [mm] good bonding conditions										
160-170	160-175	175-190	±21,0	±37,3	±55,9	±74,6	±93,2	-	±130,5	-
175-190	180-195	195-210						±116,5		±174,8
195-300	200-300	215-300	±21,0	±37,3	±55,9	±74,6	±93,2	±116,5	±130,5	±174,8

Reinforcement								
shear force bars	2x 2 ø 6	2x 2 ø 8	2x 3 ø 8	2x 4 ø 8	2x 5 ø 8	2x 4 ø 10	2x 7 ø 8	2x 6 ø 10
minimum wall / beam width [mm]	180	200	200	200	200	220	200	220
compression bearings	1 ø 12	1 ø 12	1 ø 12	2 ø 12	2 ø 12	2 ø 12	3 ø 12	3 ø 12
applicable expansion joint distances [m]	**11,7**	**11,7**	**11,7**	**11,7**	**11,7**	**11,7**	**11,7**	**11,7**

On-site reinforcement Egcobox® type VM± / VM-K± - C20/25

Egcobox type	VM48±	VM61±	VM86±	VM108±	VM130±	VM173±	VM216±	VM259±	VM333±	VM399±
length of element [mm]	**1000**	**1000**	**1000**	**1000**	**1000**	**1000**	**1000**	**1000**	**1000**	**1000**
item ② - suspension reinforcement side shear force / element										
≥ a_s [cm²] B500	1,12	1,21	1,72	2,14	2,57	3,43	4,29	5,15	6,70	8,04
x = shear force bar embedment depth (slab) [mm]	155	155	175	175	175	175	175	175	195	195

Egcobox type	VM24-K±	VM43-K±	VM65-K±	VM86-K±	VM108-K±	VM130-K±	VM151-K±	VM200-K±
length of element [mm]	**200**	**250**	**250**	**310**	**400**	**400**	**500**	**520**
item ② - suspension reinforcement shear force / element								
≥ a_s [cm²] B500	0,48	0,86	1,29	1,72	2,14	2,68	3,00	4,02
x = shear force bar embedment depth (slab) [mm]	155	175	175	175	175	195	175	195

item ③+④ - structural reinforcement
In the slab edge of the u-bar reinforcement is respectively to arrange ≥ ø8 (item ③).
On the balcony side, it is recommended to design the edge reinforcement for the shear force V_{Ed} / f_{yd} ≥ ø6/250 mm according to EN 1992 (item ④ - vs. item ②); on the floor side, an edge beam (item ⑤) ≥ ø6/250 is to be provided.

The proposed steel cross-section a_s The proposed steel cross-section as covers the maximum design transverse force V_{Rd} of the Egcobox®. In case of smaller actions, the edge reinforcement may be determined with V_{Ed} / f_{yd} ≥ ø6/250 mm.

The specifications apply to good bonding conditions.

design proposal

direct support

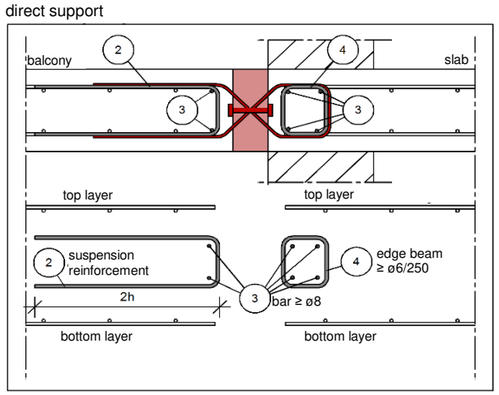

direct support (semi-prefab slab)

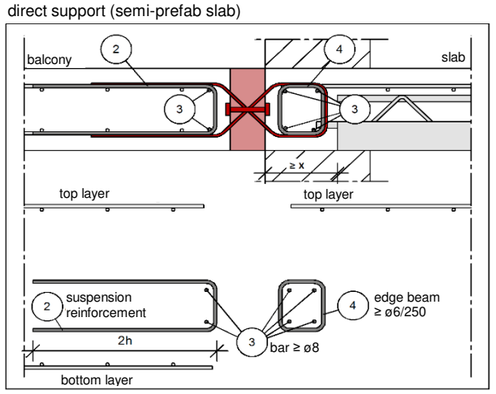

direct support: Egcobox in semi-prefab balcony

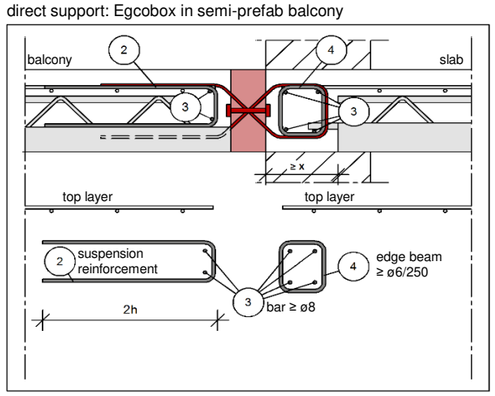

indirect support

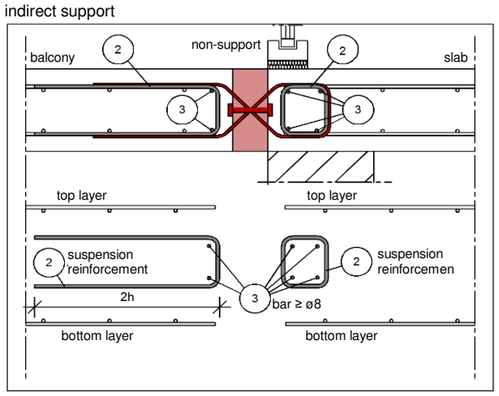

indirect support (semi-prefab slab)

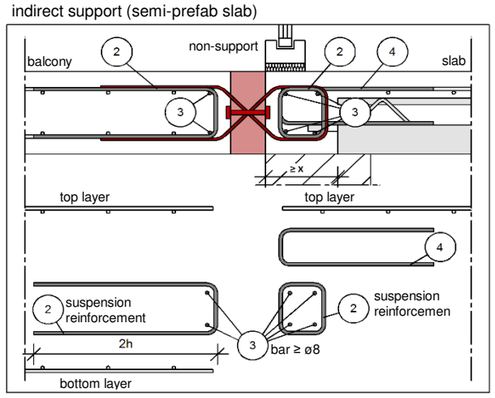

Note Egcobox in semi-prefab balcony:
It is advisable to include the constructive edging on the balcony side (item ④ vs. item ②) in the semi-prefab part.

Note indirect support (semi-prefab slab):
The information on the minimum required connection reinforcement of the Egcobox of the ceiling-side item ② does not replace the statically selected beam reinforcement of the structural engineer. This has to be considered additionally. The Pos ③ on the ceiling side, however, is only constructive and can be taken into account for the static specifications of the structural engineer.

Design table Egcobox® type VM Z - C20/25

for zero-stress connection of loggias for the transmission of shear forces, insulation 80 mm

Egcobox type			VM Z 48	VM Z 61	VM Z 86	VM Z 108	VM Z 130	VM Z 173	VM Z 216	VM Z 259	VM Z 333	VM Z 399
length of element [mm]			**1000**	**1000**	**1000**	**1000**	**1000**	**1000**	**1000**	**1000**	**1000**	**1000**
concrete cover [mm]			V_{Rd} [kN/element]									
C30	**C35**	**C50**										
height of connection [mm] good bonding conditions												
160-170	160-175	175-190	41,9	52,4	74,6	93,2	111,9	149,2	-	-	-	-
175-190	180-195	195-210							186,4	223,7	-	-
195-300	200-300	215-300	41,9	52,4	74,6	93,2	111,9	149,2	186,4	223,7	291,3	349,6

Reinforcement										
shear force bars	4 ø 6	5 ø 6	4 ø 8	5 ø 8	6 ø 8	8 ø 8	10 ø 8	12 ø 8	10 ø 10	12 ø 10
minimum wall / beam width [mm]	180	180	200	200	200	200	200	200	220	220
applicable expansion joint distances [m]	13,5	13,5	13,5	13,5	13,5	13,5	13,5	13,5	13,5	13,5
span between elements [m]	**11,7**	**11,7**	**11,7**	**11,7**	**11,7**	**11,7**	**11,7**	**11,7**	**11,7**	**11,7**

Also available as VM Z± version on request.

Design table Egcobox® type VM Z -K - C20/25

for zero-stress connection of loggias for the transmission of shear forces, insulation 80 mm

Egcobox type			VM Z 24-K	VM Z 43-K	VM Z 65-K	VM Z 86-K	VM Z 108-K	VM Z 130-K	VM Z 151-K	VM Z 200-K
length of element [mm]			**200**	**250**	**250**	**300**	**400**	**400**	**500**	**500**
concrete cover [mm]			V_{Rd} [kN/element]							
C30	**C35**	**C50**								
height of connection [mm] good bonding conditions										
160-170	160-175	175-190	21,0	37,3	55,9	74,6	93,2	-	130,5	-
175-190	180-195	195-210						116,5		174,8
195-300	200-300	215-300	21,0	37,3	55,9	74,6	93,2	116,5	130,5	174,8

Reinforcement								
shear force bars	2 ø 6	2 ø 8	3 ø 8	4 ø 8	5 ø 8	4 ø 10	7 ø 8	6 ø 10
minimum wall / beam width [mm]	180	200	200	200	200	220	200	220
applicable expansion joint distances [m]	13,5	13,5	13,5	13,5	13,5	13,5	13,5	13,5
span between elements [m]	**5,85**	**5,85**	**5,85**	**5,85**	**5,85**	**5,85**	**5,85**	**5,85**

Also available as VM Z-K± version on request.

The Egcobox VM Z or VM Z-K is to be used opposite each other in combination with the Egcobox VM or VM-K of the same bearing stage or an opposite bending resistant support.

On-site reinforcement Egcobox® type VM Z / VM Z -K - C20/25

Egcobox type	VM Z 48	VM Z 61	VM Z 86	VM Z 108	VM Z 130	VM Z 173	VM Z 216	VM Z 259	VM Z 333	VM Z 399
length of element [mm]	**1000**	**1000**	**1000**	**1000**	**1000**	**1000**	**1000**	**1000**	**1000**	**1000**
in combination with	VM48	VM61	VM86	VM108	VM130	VM173	VM216	VM259	VM333	VM399
	or an opposite bending resistant support									
item ② - suspension reinforcement side shear force / element										
≥ a_s [cm²] B500	1,12	1,40	1,99	2,49	2,99	3,98	4,98	5,97	7,78	9,33
x = shear force bar embedment depth (slab) [mm]	155	155	175	175	175	175	175	175	195	195
item ⑤ - tie member (add. reinforcement) in the loggia for transmitting the horizontal tension forces from the Egcobox VM to VM Z										
≥ as [cm²] B500	1,12	1,40	1,99	2,49	2,99	3,98	4,98	5,97	7,78	9,33
item ⑥ - max. required add. reinforcement (tension) in the connection area of the Egcobox VM in case of e.g. asymmetrical loads on the loggia										
≥ a_s [cm²] B500	0,39	0,49	0,70	0,87	1,04	1,39	1,74	2,09	2,72	3,27

Egcobox type	VM Z 24-K	VM Z 43-K	VM Z 65-K	VM Z 86-K	VM Z 108-K	VM Z 130-K	VM Z 151-K	VM Z 200-K
length of element [mm]	**200**	**250**	**250**	**300**	**400**	**400**	**500**	**500**
in combination with	VM24-K	VM43-K	VM65-K	VM86-K	VM108-K	VM130-K	VM151-K	VM200-K
	or an opposite bending resistant support							
item ② - suspension reinforcement side shear force / element								
≥ a_s [cm²] B500	0,48	0,86	1,29	1,72	2,14	2,68	3,00	4,02
x = shear force bar embedment depth (slab) [mm]	155	175	175	175	175	195	175	195
item ⑤ - tie member (add. reinforcement) in the loggia for transmitting the horizontal tension forces from the Egcobox VM-K to VM Z-K								
≥ as [cm²] B500	0,48	0,86	1,29	1,72	2,14	2,68	3,00	4,02
item ⑥ - max. required add. reinforcement (tension) in the connection area of the Egcobox VM-K in case of e.g. asymmetrical loads on the loggia								
≥ a_s [cm²] B500	0,17	0,30	0,45	0,60	0,75	0,94	1,05	1,41

item ③+④ - structural reinforcement
In the slab edge of the u-bar reinforcement is respectively to arrange ≥ ø8 (item ③).
On the balcony side, it is recommended to design the edge reinforcement for the shear force V_{Ed} / f_{yd} ≥ ø6/250 mm according to EN 1992 (item ④ - vs. item ②); on the floor side, an edge beam (item ⑤) ≥ ø6/250 is to be provided.

The proposed steel cross-section a_s The proposed steel cross-section as covers the maximum design transverse force V_{Rd} of the Egcobox®. In case of smaller actions, the edge reinforcement may be determined with V_{Ed} / f_{yd} ≥ ø6/250 mm.

item ⑤+⑥ - additional reinforcement
When planning zero-stress elements, care must be taken to ensure that the resulting tensile forces are absorbed in the lower reinforcement layer of the loggia by a tie member (item ⑤).
At maximum design shear force V_{Rd} of Egcobox®, the reinforcement cross-section of the tension member should correspond to the transverse force bars.
In addition, additional tension forces may occur, e.g. due to asymmetrical loading of the balcony plate. These can be absorbed by arranging Egcobox® Short-Elements (modules) or by additional tension rods (V4A) in the Egcobox VM_ or VM_-K.
The proposed steel cross-section a_s The proposed steel cross-section (item ⑥) as covers the maximum design transverse force V_{Rd} of the Egcobox®. In case of smaller actions, the edge reinforcement may be determined with V_{Ed} / f_{yd} ≥ ø6/250 mm.

The specifications apply to good bonding conditions.

design proposal

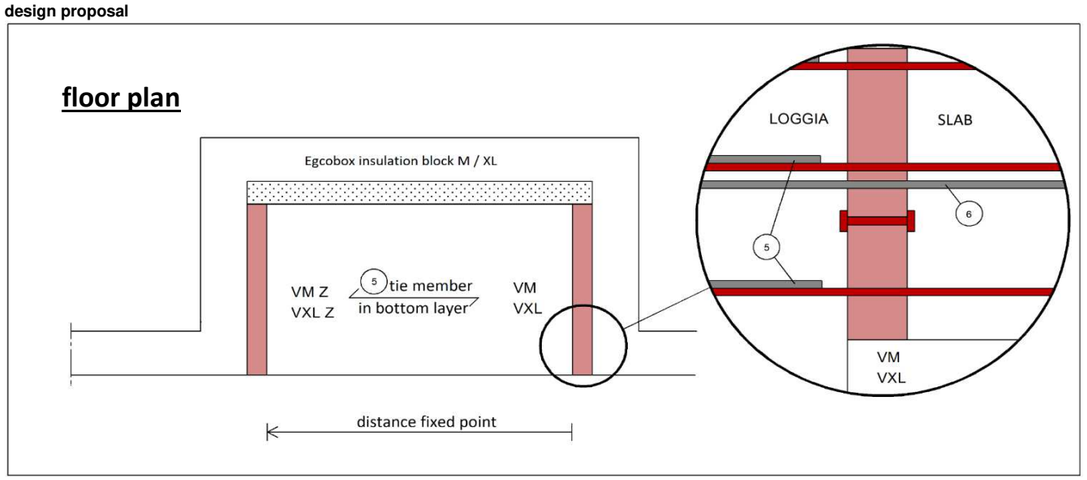

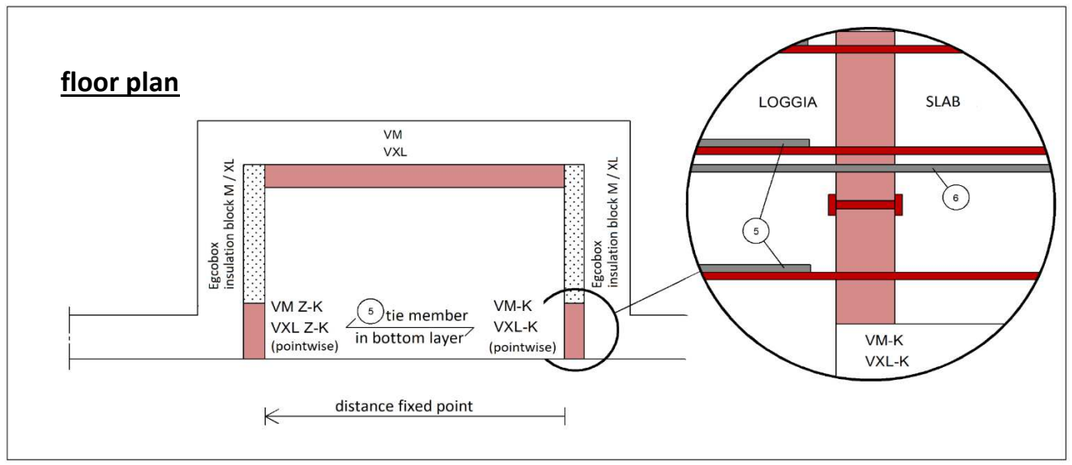

direct support

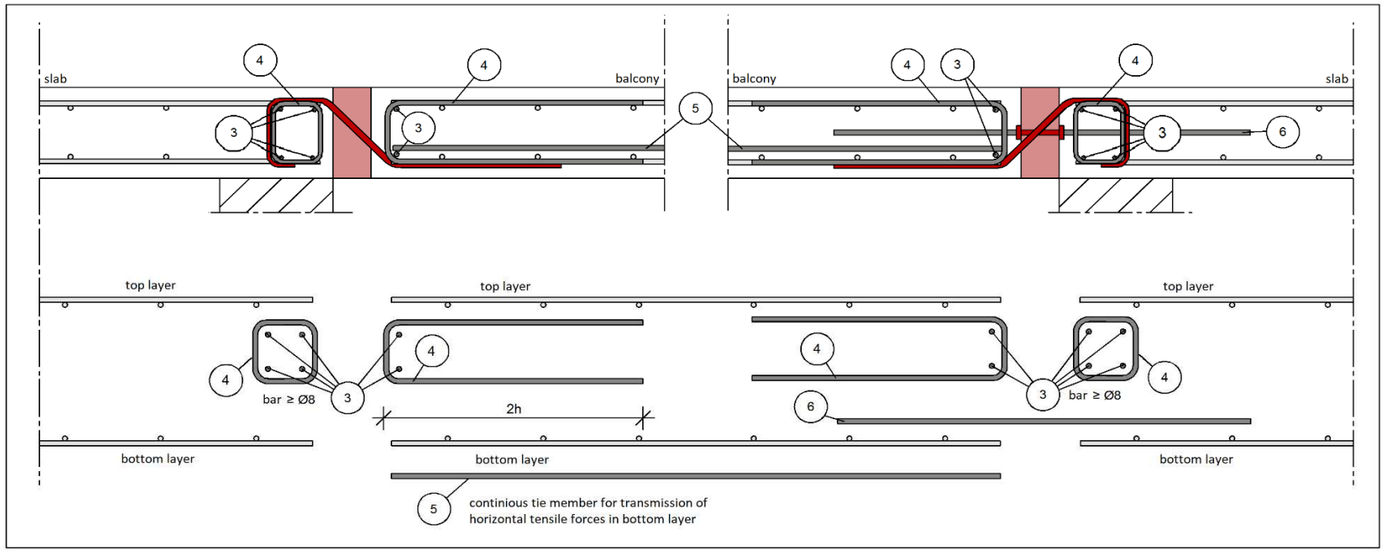

indirect support

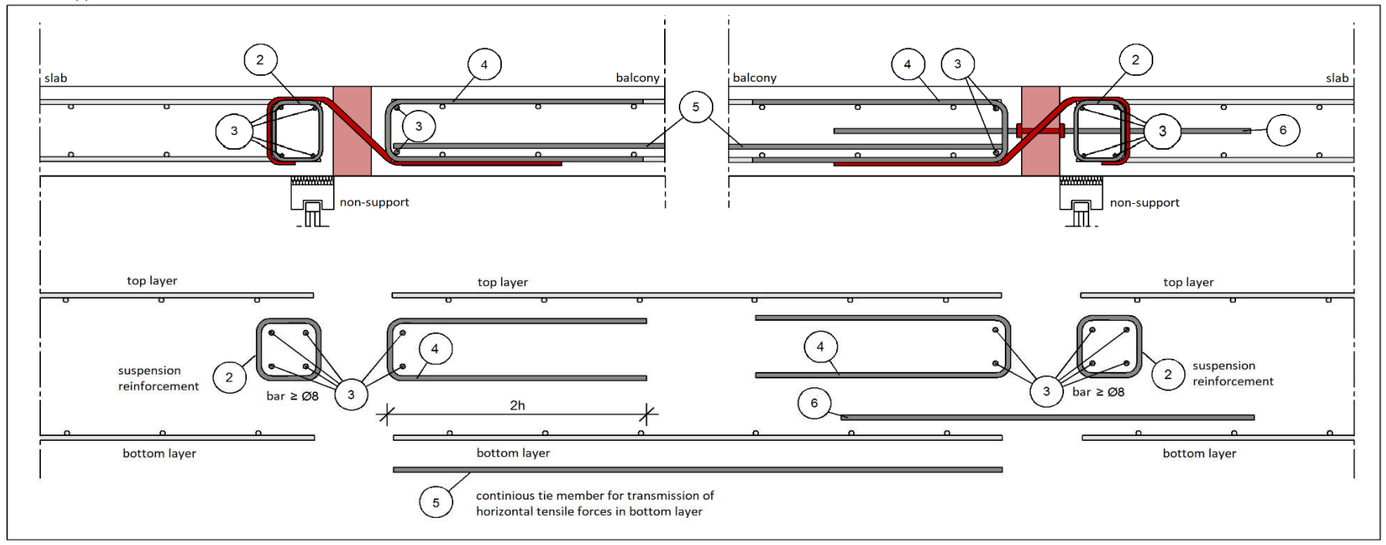

Egcobox® type VM, VM±, VM-K, VM-K± - C20/25

Moments from eccentric connection

When using the Egcobox® V... for the transmission of shear force requirements only, a moment from eccentric connection has to be considered additionally when dimensioning the connection reinforcement.
The moment ΔM_{Ed} is determined under the assumption of a shear force utilisation of 100%.

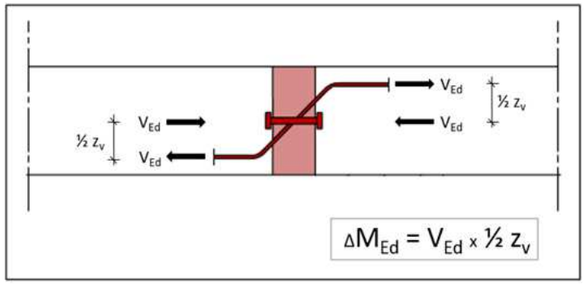

Egcobox type			VM48 VM48±	VM61 VM61±	VM86 VM86±	VM108 VM108±	VM130 VM130±	VM173 VM173±	VM216 VM216±	VM259 VM259±	VM333 VM333±	VM399 VM399±
length of element [mm]			1000	1000	1000	1000	1000	1000	1000	1000	1000	1000
concrete cover [mm]			ΔM_{Ed} [kNm/element] for height of connectionn									
C30	C35	C50										
height of connection [mm] good bonding conditions												
160-170	160-175	175-190	41,9	52,4	74,6	93,2	111,9	149,2	-	-	-	-
175-190	180-195	195-210	41,9	52,4	74,6	93,2	111,9	149,2	186,4	223,7	-	-
195-225	200-230	215-245	41,9	52,4	74,6	93,2	111,9	149,2	186,4	223,7	291,3	349,6
230-260	235-265	250-280	41,9	52,4	74,6	93,2	111,9	149,2	186,4	223,7	291,3	349,6
265-300	270-300	285-300	41,9	52,4	74,6	93,2	111,9	149,2	186,4	223,7	291,3	349,6

Egcobox type			VM24-K VM24-K±	VM43-K VM43-K±	VM65-K VM65-K±	VM86-K VM86-K±	VM108-K VM108-K±	VM130-K VM130-K±	VM151-K VM151-K±	VM200-K VM200-K±
length of element [mm]			200	250	250	300 310	400	400	500	500 520
concrete cover [mm]			ΔM_{Ed} [kNm/element] for height of connection							
C30	C35	C50								
height of connection [mm] good bonding conditions										
160-170	160-175	175-190	1,4	2,5	3,7	5,0	6,2	-	8,7	-
175-190	180-195	195-210	1,7	3,0	4,5	6,0	7,5	9,4	10,5	14,1
195-225	200-230	215-245	2,0	3,5	5,3	7,0	8,8	11,0	12,3	16,5
230-260	235-265	250-280	2,5	4,4	6,7	8,9	11,1	13,9	15,5	20,8
265-300	270-300	285-300	3,5	6,3	9,4	12,5	15,7	19,6	21,9	29,4

Design table Egcobox® type AM

for parapet wall, insulation 80 mm

Egcobox type	AM10-140	AM10-150	AM10-200	AM20-140	AM20-150	AM20-200	AM30-140	AM30-150	AM30-200
length of element [mm]	250			250			250		
height of element [mm]	140 - 250			140 - 250			140 - 250		
width of parapet wall [mm]	140	150 - 190	200 - 250	140	150 - 190	200 - 250	140	150 - 190	200 - 250

concrete strength	N_{Rd} [kN/element] I M_{Rd} [kNm/element]																	
	$N_{R,d}$	$M_{R,d}$	$N_{R,d}$	$M_{R,d}$	$N_{R,d}$	$M_{R,d}$	$N_{R,d}$	$M_{R,d}$	$N_{R,d}$	$M_{R,d}$	$N_{R,d}$	$M_{R,d}$	$N_{R,d}$	$M_{R,d}$	$N_{R,d}$	$M_{R,d}$	$N_{R,d}$	$M_{R,d}$
C20/25 parapet wall C20/25 slab C20/25	0,0	± 2,39	0,0	± 2,69	0,0	± 3,05	0,0	± 3,83	0,0	± 4,70	0,0	± 6,50	0,0	± 3,83	0,0	± 4,70	0,0	± 6,50
	10,0	± 1,99	10,0	± 2,24	10,0	± 2,43	10,0	± 3,43	10,0	± 4,25	10,0	± 5,85	10,0	± 3,43	10,0	± 4,25	10,0	± 5,85
	20,0	± 1,59	20,0	± 1,79	20,0	± 1,82	20,0	± 3,03	20,0	± 3,80	20,0	± 5,20	20,0	± 3,03	20,0	± 3,80	20,0	± 5,20
	30,0	± 1,19	30,0	± 1,34	30,0	± 1,20	30,0	± 2,63	30,0	± 3,35	30,0	± 4,55	30,0	± 2,63	30,0	± 3,35	30,0	± 4,55
	40,0	± 0,79	40,0	± 0,89	40,0	± 0,59	40,0	± 2,23	40,0	± 2,90	40,0	± 3,90	40,0	± 2,23	40,0	± 2,90	40,0	± 3,90
	50,0	± 0,39	50,0	± 0,44	49,6	± 0,00	50,0	± 1,83	50,0	± 2,45	50,0	± 3,25	50,0	± 1,83	50,0	± 2,45	50,0	± 3,25
	60,0	± 0,00	59,8	± 0,00	-	-	60,0	± 1,43	60,0	± 2,00	60,0	± 2,60	60,0	± 1,43	60,0	± 2,00	60,0	± 2,60
	V_{Rd} [kN/element]																	
	± 4,84		± 5,31		± 6,87		± 5,89		± 6,46		± 8,36		± 11,78		± 12,92		± 16,71	

concrete strength	N_{Rd} [kN/element] I M_{Rd} [kNm/element]																	
	$N_{R,d}$	$M_{R,d}$	$N_{R,d}$	$M_{R,d}$	$N_{R,d}$	$M_{R,d}$	$N_{R,d}$	$M_{R,d}$	$N_{R,d}$	$M_{R,d}$	$N_{R,d}$	$M_{R,d}$	$N_{R,d}$	$M_{R,d}$	$N_{R,d}$	$M_{R,d}$	$N_{R,d}$	$M_{R,d}$
C25/30 parapet wall C25/30 slab ≥C20/25	0,0	± 2,40	0,0	± 3,12	0,0	± 3,18	0,0	± 3,83	0,0	± 4,70	0,0	± 6,91	0,0	± 3,83	0,0	± 4,70	0,0	± 6,91
	10,0	± 2,05	10,0	± 2,67	10,0	± 2,62	10,0	± 3,43	10,0	± 4,25	10,0	± 6,28	10,0	± 3,43	10,0	± 4,25	10,0	± 6,28
	20,0	± 1,71	20,0	± 2,22	20,0	± 2,07	20,0	± 3,03	20,0	± 3,80	20,0	± 5,66	20,0	± 3,03	20,0	± 3,80	20,0	± 5,66
	30,0	± 1,36	30,0	± 1,77	30,0	± 1,52	30,0	± 2,63	30,0	± 3,35	30,0	± 5,04	30,0	± 2,63	30,0	± 3,35	30,0	± 5,04
	40,0	± 1,02	40,0	± 1,32	40,0	± 0,97	40,0	± 2,23	40,0	± 2,90	40,0	± 4,42	40,0	± 2,23	40,0	± 2,90	40,0	± 4,42
	50,0	± 0,67	50,0	± 0,87	50,0	± 0,42	50,0	± 1,83	50,0	± 2,45	50,0	± 3,80	50,0	± 1,83	50,0	± 2,45	50,0	± 3,80
	60,0	± 0,32	59,8	± 0,42	57,5	± 0,00	60,0	± 1,43	60,0	± 2,00	60,0	± 3,18	60,0	± 1,43	60,0	± 2,00	60,0	± 3,18
	V_{Rd} [kN/element]																	
	± 5,62		± 6,16		± 7,97		± 6,22		± 6,93		± 8,82		± 12,42		± 13,85		± 17,61	

Reinforcement			
tension- / compression bars	2 ø 10	3 ø 10	3 ø 10
shear force bars	2 x 1 ø 6	2 x 1 ø 6	2 x 2 ø 6
u-bars ex works	2 ø 8	4 ø 8	4 ø 10
applicable expansion joint distances [m]	**13,0**	**13,0**	**13,0**

concrete cover parapet wall $c_a \geq 30$ mm; concrete cover slab $25 \geq c_v \geq 35$ mm shear force bars

The u-bars ex works are included in delivery.
The design talbe is also valid for other insulation thicknesses: 60 mm (AS), 100 mm (AL), 120 mm (AXL)
The expansion joint distances vary depending on the joint thickness: 60 mm = 7,80 m; 100 mm = 17,3 m; 120 mm = 21,7 m

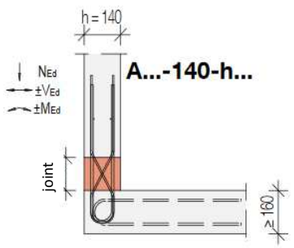

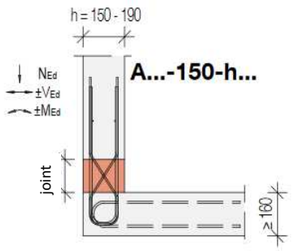

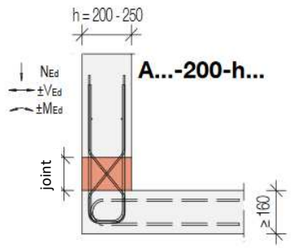

On-site reinforcement Egcobox® type AM

The additional reinforcement is suitable also for Egcobox with insulation thickness 60 mm (AS), 100 mm (AL) and 120 mm (AXL).

type Egcobox	AM10-140	AM10-150	AM10-200	AM20-140	AM20-150	AM20-200	AM30-140	AM30-150	AM30-200
length of element [mm]	**250**								
height of element [mm]	**140 - 250**								
item ⓪ - u-bar reinforcement ex works									
rebar	2 ø8	2 ø8	2 ø8	4 ø8	4 ø8	4 ø8	4 ø10	4 ø10	4 ø10
item ① - lapping reinforcement in parapet									
≥ a_s [cm²] B500	1,57	1,57	1,57	2,36	2,36	2,36	2,36	2,36	2,36
rebar	2 ø10	2 ø10	2 ø10	3 ø10	3 ø10	3 ø10	3 ø10	3 ø10	3 ø10
item ② - u-bar reinforcement in parape									
rebar	ø6 / 250 mm	ø6 / 250 mm	ø6 / 250 mm	ø6 / 250 mm	ø6 / 250 mm	ø6 / 250 mm	ø6 / 150 mm	ø6 / 150 mm	ø6 / 150 mm
item ③ - rebars									
rebar	ø8	ø8	ø8	ø8	ø8	ø8	ø8	ø8	ø8
item ④ - structural reinforcement in the slab edge for thickness <200 mm									
rebar	ø6 / 250 mm	ø6 / 250 mm	ø6 / 250 mm	ø6 / 250 mm	ø6 / 250 mm	ø6 / 250 mm	ø6 / 250 mm	ø6 / 250 mm	ø6 / 250 mm
item ④ - structural reinforcement in the slab edge for thickness >200 mm									
rebar	ø6 / 150 mm	ø6 / 150 mm	ø6 / 150 mm	ø6 / 150 mm	ø6 / 150 mm	ø6 / 150 mm	ø6 / 150 mm	ø6 / 150 mm	ø6 / 150 mm
item ⑤ - lapping reinforcement in slab									
≥ a_s [cm²] B500	1,01	1,01	1,01	2,01	2,01	2,01	2,01	2,01	2,01
rebar	2 ø8	2 ø8	2 ø8	4 ø8	4 ø8	4 ø8	4 ø10	4 ø10	4 ø10

The suggested reinforcement is selected to transfer 100% of the M_{Rd} and V_{Rd} of the Egcobox®. An other reinforcement selection is possible.

design proposal

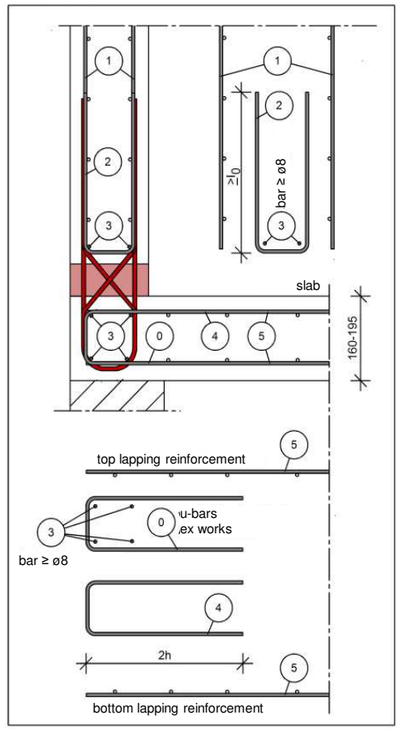

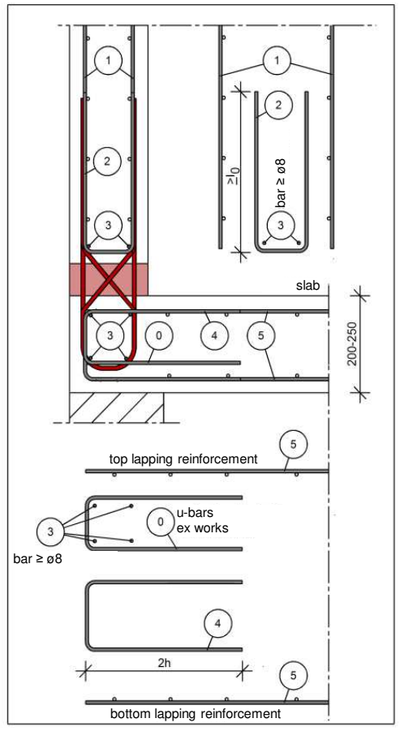

boundery conditions

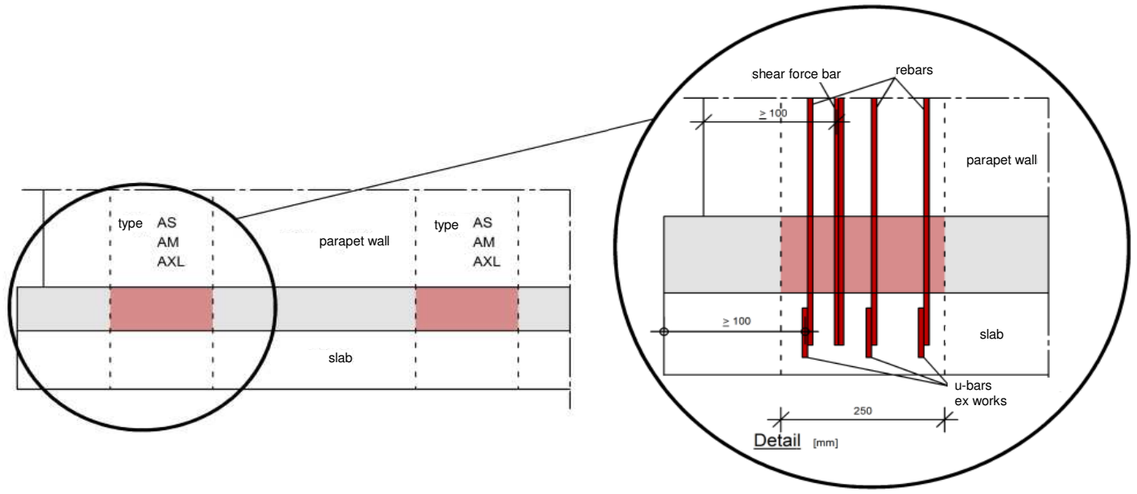

Design table Egcobox® type FM

for console element parapet, insulation 80 mm

Egcobox type	FM10-160	FM10-200	FM20-160	FM20-200	FM30-160	FM30-200
length of element [mm]	250		250		250	
height of element [mm]	160 - 190	200 - 250	160 - 190	200 - 250	160 - 190	200 - 250
width of parapet wall [mm]	≥ 150		≥ 150		≥ 150	

concrete strength	N_{Rd} [kN/element] I M_{Rd} [kNm/element]											
	$N_{R,d}$	$M_{R,d}$	$N_{R,d}$	$M_{R,d}$	$N_{R,d}$	$M_{R,d}$	$N_{R,d}$	$M_{R,d}$	$N_{R,d}$	$M_{R,d}$	$N_{R,d}$	$M_{R,d}$
C20/25 parapet wall C20/25 slab C20/25	- 28,0	± 0,00	- 28,0	± 0,00	- 42,0	± 0,00	- 42,0	± 0,00	- 56,0	± 0,00	- 56,0	± 0,00
	- 16,7	± 0,52	- 16,7	± 0,74	- 25,1	± 0,78	- 25,1	± 1,11	- 33,5	± 1,04	- 33,5	± 1,49
	- 9,2	± 0,86	- 9,2	± 1,24	- 13,9	± 1,29	- 13,9	± 1,86	- 18,5	± 1,73	- 18,5	± 2,48
	- 0,0	± 1,29	- 0,0	± 1,85	- 0,0	± 1,93	- 0,0	± 2,77	- 0,0	± 2,58	- 0,3	± 3,67
	0,0	± 1,73	0,0	± 2,48	0,0	± 2,59	0,0	± 3,67	0,0	± 3,34	0,0	± 3,67
	2,5	± 1,73	2,5	± 2,48	3,7	± 2,59	4,3	± 3,67	7,4	± 3,34	24,3	± 3,67
	17,5	± 1,04	17,5	± 1,49	26,2	± 1,55	26,2	± 2,23	35,0	± 2,07	35,0	± 2,97
	25,0	± 0,69	25,0	± 0,99	37,5	± 1,04	37,5	± 1,49	50,0	± 1,38	50,0	± 1,98
	32,5	± 0,35	32,5	± 0,50	48,7	± 0,52	48,7	± 0,74	65,0	± 0,69	65,0	± 0,99
	40,0	± 0,00	40,0	± 0,00	60,0	± 0,00	60,0	± 0,00	80,0	± 0,00	80,0	± 0,00
	V_{Rd} [kN/element]											
	± 13,80		± 17,60		± 13,80		± 17,60		± 13,80		± 17,60	

concrete strength	N_{Rd} [kN/element] I M_{Rd} [kNm/element]											
	$N_{R,d}$	$M_{R,d}$	$N_{R,d}$	$M_{R,d}$	$N_{R,d}$	$M_{R,d}$	$N_{R,d}$	$M_{R,d}$	$N_{R,d}$	$M_{R,d}$	$N_{R,d}$	$M_{R,d}$
C25/30 parapet wall C25/30 slab ≥C20/25	- 32,5	± 0,00	- 32,5	± 0,00	- 48,7	± 0,00	- 48,7	± 0,00	- 65,0	± 0,00	- 65,0	± 0,00
	- 21,2	± 0,52	- 21,2	± 0,74	- 31,8	± 0,78	- 31,8	± 1,11	- 42,5	± 1,04	- 42,5	± 1,49
	- 13,7	± 0,86	- 13,7	± 1,24	- 20,6	± 1,29	- 20,6	± 1,86	- 27,5	± 1,73	- 27,5	± 2,48
	- 4,5	± 1,29	- 4,5	± 1,85	- 6,7	± 1,93	- 6,7	± 2,77	- 9,0	± 2,58	- 9,0	± 3,70
	0,0	± 1,73	0,0	± 2,48	0,0	± 2,59	0,0	± 3,71	0,0	± 3,45	0,0	± 4,26
	8,9	± 1,73	8,9	± 2,48	13,3	± 2,59	13,3	± 3,71	17,8	± 3,45	28,3	± 4,26
	23,9	± 1,04	23,9	± 1,49	35,9	± 1,55	35,9	± 2,23	47,8	± 2,07	47,8	± 2,97
	31,4	± 0,69	31,4	± 0,99	47,1	± 1,04	47,1	± 1,49	62,8	± 1,38	62,8	± 1,98
	38,9	± 0,35	38,9	± 0,50	58,4	± 0,52	58,4	± 0,74	77,8	± 0,69	77,8	± 0,99
	46,4	± 0,00	46,4	± 0,00	69,6	± 0,00	69,6	± 0,00	92,8	± 0,00	92,8	± 0,00
	V_{Rd} [kN/element]											
	± 13,80		± 17,60		± 13,80		± 17,60		± 13,80		± 17,60	

Reinforcement			
tension- / compression bars	2 ø 8	3 ø 8	4 ø 8
shear force bars	2 x 2 ø 6	2 x 2 ø 6	2 x 2 ø 6
u-bars ex works	3 ø 8	3 ø 8	3 ø 8
applicable expansion joint distances [m]	**13,5**	**13,5**	**13,5**

concrete cover parapet wall c_a ≥ 40 mm; concrete cover slab c_{vo} = 35 mm shear force bars

The u-bars ex works are included in delivery.

The design talbe is also valid for other insulation thicknesses: 60 mm (FS), 100 mm (FL), 120 mm (FXL)

The expansion joint distances vary depending on the joint thickness: 60 mm = 8,10 m; 80 mm = 13,5 m; 100 mm = 18,2 m

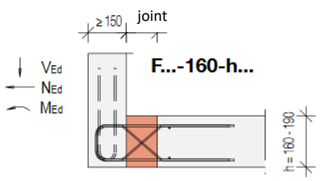

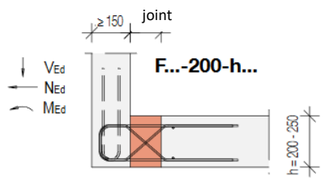

On-site reinforcement Egcobox® type FM

The additional reinforcement is suitable also for Egcobox with insulation thickness 60 mm (FS), 100 mm (FL) and 120 mm (FXL).

type Egcobox	FM10-160	FM10-200	FM20-160	FM20-200	FM30-160	FM30-200
length of element [mm]	**250**					
height of element [mm]	**160 - 250**					
item ⓪ - u-bar reinforcement ex works						
rebar	3 ø8	3 ø8	3 ø8	3 ø8	3 ø8	3 ø8
item ① - lapping reinforcement in parapet						
≥ a_s [cm²] B500	1,51	1,51	1,51	1,51	1,51	1,51
rebar	3 ø8	3 ø8	3 ø8	3 ø8	3 ø8	3 ø8
item ② - u-bar reinforcement in parapet for thickness <200 mm						
rebar	ø6 / 250 mm	ø6 / 250 mm	ø6 / 250 mm	ø6 / 250 mm	ø6 / 250 mm	ø6 / 250 mm
item ② - u-bar reinforcement in parapet for thickness >200 mm						
rebar	ø6 / 150 mm	ø6 / 150 mm	ø6 / 150 mm	ø6 / 150 mm	ø6 / 150 mm	ø6 / 150 mm
item ③ - rebars						
rebar	ø8	ø8	ø8	ø8	ø8	ø8
item ④ - design reinforcement in the slab edge						
rebar	ø6 / 250 mm	ø6 / 250 mm	ø6 / 250 mm	ø6 / 250 mm	ø6 / 250 mm	ø6 / 250 mm
item ⑤ - lapping reinforcement in slab						
≥ a_s [cm²] B500	1,01	1,01	1,51	1,51	2,01	2,01
rebar	2 ø8	2 ø8	3 ø8	3 ø8	4 ø8	4 ø8

The suggested reinforcement is selected to transfer 100% of the M_{Rd} and V_{Rd} of the Egcobox®. An other reinforcement selection is possible.

design proposal

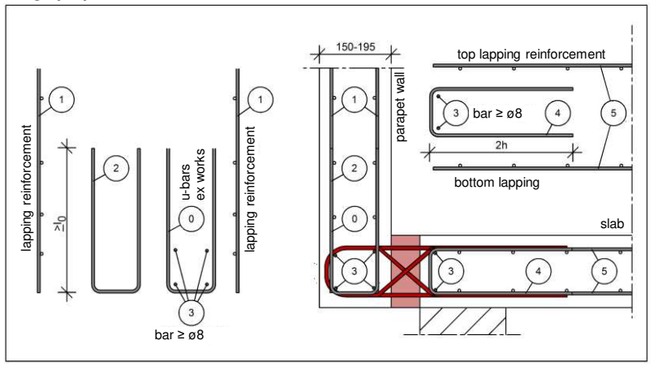

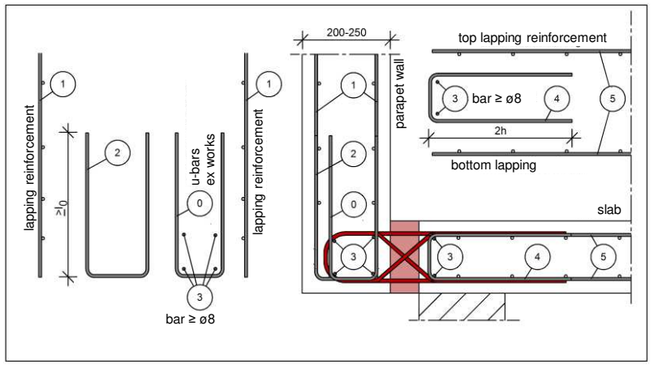

boundery conditions

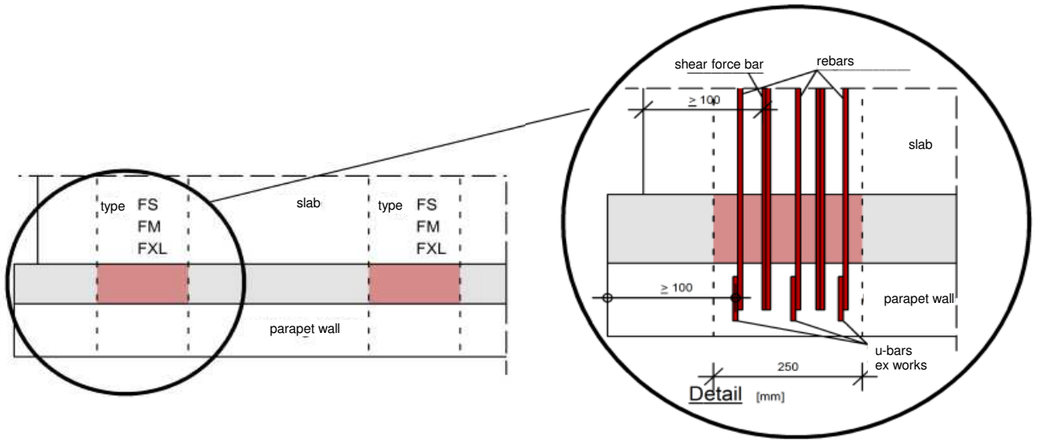

Design table Egcobox® type OM

for corbel elements, insulation 80 mm

Egcobox type	OM16	OM20
length of element [mm]	250	
height of element [mm]	180 - 250	
width of corbel element [mm]	160	200

concrete strength	distance x [mm]	N_{Rd} [kN/element]	
	65 - 145	± 15,0	± 20,0
		V_{Rd} [kN/element]	
C20/25	65,0	26,7	29,1
	75,0	25,5	27,8
	85,0	24,4	26,7
	95,0	23,4	25,6
	105,0	22,5	24,6
	115,0	-	23,6
	125,0	-	22,8
	135,0	-	22,0
	145,0	-	21,2

concrete strength	distance x [mm]	N_{Rd} [kN/element]	
	65 - 145	± 15,0	± 20,0
		V_{Rd} [kN/element]	
C25/30	65,0	27,7	30,5
	75,0	27,5	29,2
	85,0	26,3	27,9
	95,0	25,2	26,8
	105,0	24,2	25,7
	115,0	-	24,8
	125,0	-	23,9
	135,0	-	23,0
	145,0	-	22,2

Reinforcement	
tension- / compression bars	3 ø 10
compression bearings	2 ø 12
applicable expansion joint distances [m]	**11,7**

concrete cover corbel element $c_a \geq 30$ mm; concrete cover slab $c_{vo} = 30$ mm

The console must generally be designed with at least concrete strength C25/30.
The design talbe is also valid for other insulation thicknesses: 60 mm (OS), 100 mm (OL), 120 mm (OXL)
The expansion joint distances vary depending on the joint thickness: 60 mm = 6,90 m; 80 mm = 11,7 m; 100 mm = 15,7 m

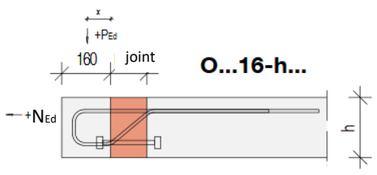

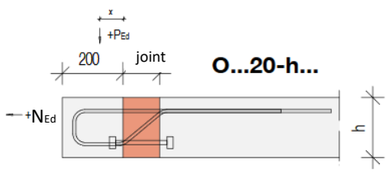

On-site reinforcement Egcobox® type OM

The additional reinforcement is suitable also for Egcobox with insulation thickness 60 mm (OS), 100 mm (OL) and 120 mm (OXL).

type Egcobox	OM16	OM20
length of element [mm]	**250**	
height of element [mm]	**180 - 250**	
item ① - lapping reinforcement		
≥ a_s [cm²] B500	2,36	2,36
rebar	3 ø10	3 ø10
item ② - suspension reinforcement in corbel [1)]		
≥ a_s [cm²] B500	3,06	3,06
rebar	4 ø10	4 ø10
item ③ - rebars		
rebar	ø8	ø8
item ④ - structural reinforcement in the slab edge		
rebar	ø6 / 250 mm	ø6 / 250 mm

The suggested reinforcement is selected to transfer 100% of the M_{Rd} and V_{Rd} of the Egcobox®. An other reinforcement selection is possible.

[1)] The required reinforcement of the corbel itself has to be calculated by the responsible engineer in additional.

design proposal

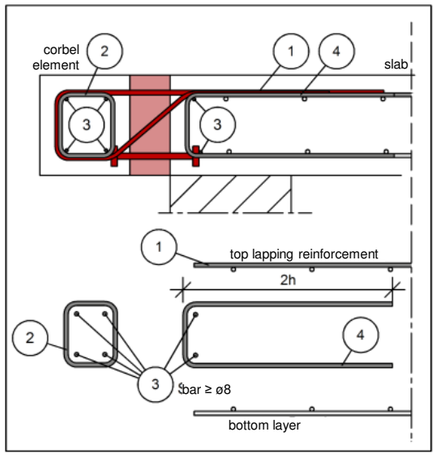

boundery conditions

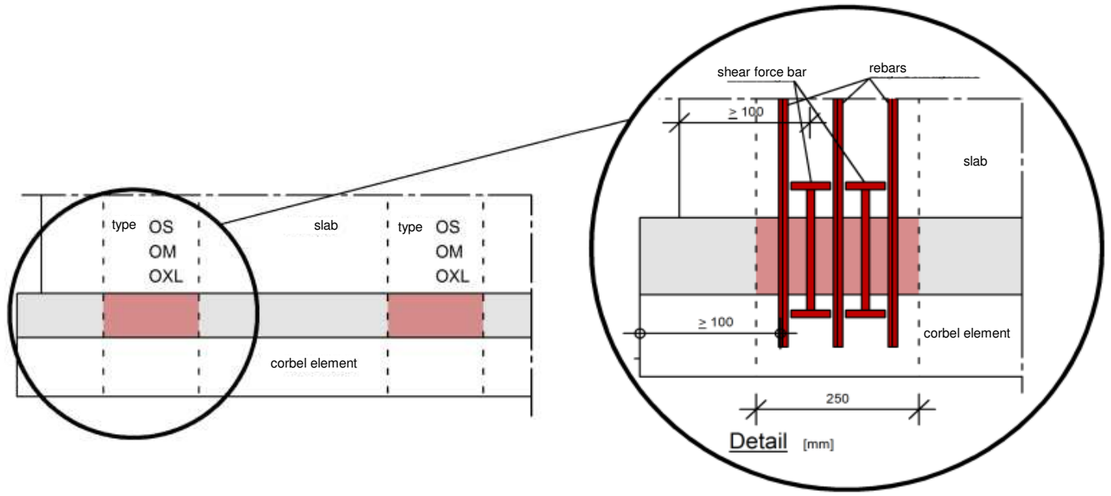

Design table Egcobox® type MM-Module - C20/25

Supplementary elements for transmission of normal forces and horizontal shear forces, insulation 80 mm

	Egcobox type			MM-VH10	MM-NH10	MM-NH15	MM-NH20	MM-VNH10	MM-VNH15	MM-VNH20	MM-VNH-E10	MM-VNH-E20
	length of element [mm]			100	100	100	100	100	100	100	100	100
	concrete cover [mm]			M_{Rd} [kNm/element]								
	C30	C35	C50									
height of connection [mm]		**160**	175	-	-	-	-	-	-	-	5,2	8,4
	160	165	**180**	-	-	-	-	-	-	-	5,5	8,9
	165	170	185	-	-	-	-	-	-	-	5,8	9,3
	170	175	190	-	-	-	-	-	-	-	6,1	9,8
	175	**180**	195	-	-	-	-	-	-	-	6,4	10,3
	180	185	**200**	-	-	-	-	-	-	-	6,7	10,8
	185	190	205	-	-	-	-	-	-	-	7,0	11,3
	190	195	210	-	-	-	-	-	-	-	7,3	11,8
	195	**200**	215	-	-	-	-	-	-	-	7,6	12,3
	200	205	**220**	-	-	-	-	-	-	-	7,9	12,8
	205	210	225	-	-	-	-	-	-	-	8,2	13,3
	210	215	230	-	-	-	-	-	-	-	8,5	13,8
	215	**220**	235	-	-	-	-	-	-	-	8,8	14,3
	220	225	**240**	-	-	-	-	-	-	-	9,1	14,8
	225	230	245	-	-	-	-	-	-	-	9,4	15,2
	230	235	250	-	-	-	-	-	-	-	9,7	15,7
	235	**240**	255	-	-	-	-	-	-	-	10,0	16,2
	240	245	**260**	-	-	-	-	-	-	-	10,3	16,7
	245	250	265	-	-	-	-	-	-	-	10,6	17,2
	250	255	270	-	-	-	-	-	-	-	10,9	17,7
	255	**260**	275	-	-	-	-	-	-	-	11,2	18,2
	260	265	**280**	-	-	-	-	-	-	-	11,5	18,7
	265	270	285	-	-	-	-	-	-	-	11,8	19,2
	270	275	290	-	-	-	-	-	-	-	12,1	19,7
	275	**280**	295	-	-	-	-	-	-	-	12,4	20,2
	280	285	**300**	-	-	-	-	-	-	-	12,6	20,7
	285	290		-	-	-	-	-	-	-	12,9	21,1
	290	295		-	-	-	-	-	-	-	13,2	21,6
	295	**300**		-	-	-	-	-	-	-	13,5	22,1
	300			-	-	-	-	-	-	-	13,8	22,6

	concrete cover [mm]			V_{Rdy} [kN/element]								
	C30	C35	C50									
connection -height [mm]	160-300	160-300	175-300	±9,1	-	-	-	±9,1	±9,1	±34,1	±15,4	±35,0

	concrete cover [mm]			N_{Rdx} [kN/element]								
	C30	C35	C50									
connection -height [mm]	160-300	160-300	175-300	-	±12,0	±18,2	±51,8	±12,0	±18,2	±51,8	51,7	85,1

Egcobox® MM-VH and MM-VNH only to be used in combination with other Egcobox® elements. Prerequisite pressure absorption with D_{Rd} > 9,1 kN resp. > 36,8 kN

Egcobox® MM-VNH-E for transfer of uplifting moments M_{Rd} is to be used only in connection with other Egcobox® elements ≥ MM20. The concrete cover refers to the adjacent Egcobox® ≥ MM20. M_{Rd} and N_{Rdx} do not act simultaneously.

Reinforcement Egcobox® type MM-Module

Egcobox type	MM-VH10	MM-NH10	MM-NH15	MM-NH20	MM-VNH10	MM-VNH15	MM-VNH20	MM-VNH-E10	MM-VNH-E20
length of element [mm]	**100**	**100**	**100**	**100**	**100**	**100**	**100**	**100**	**100**
tensile bars	-	-	-	-	-	-	-	2 ø 8	2 ø 12
length of tensile bars [mm]	-	-	-	-	-	-	-	1070	1300
tension / compression bars	-	1 ø 10	1 ø 10	1 ø 14	1 ø 10	1 ø 10	1 ø 14	-	-
length of tension / compression bars [mm	-	410	580	1100	410	580	1100	-	-
shear force bars	2x 1 ø 8	-	-	-	2x 1 ø 8	2x 1 ø 8	2x 1 ø 10	2x 1 ø 8	2x 1 ø 10
length of shear force bars l_0 [mm]	200				200	200	520	340	600
applicable expansion joint distances [n	**13,5**	**13,5**	**13,5**	**11,7**	**13,5**	**13,5**	**11,7**	**13,5**	**13,5**